Truro Planning Board Agenda

Remote Meeting

Wednesday, October 19, 2022 – 5:00 pm

www.truro-ma.gov

TOWN OF TRURO
OCT 17 2022
10:23AM
RECEIVED
TOWN CLERK

Open Meeting

This will be a remote public meeting. Citizens can view the meeting on Channel 18 in Truro and on the web on the "Truro TV Channel 18" button under "Helpful Links" on the homepage of the Town of Truro website (**www.truro-ma.gov**). Click on the green "Watch" button in the upper right corner of the page. Please note that there may be a slight delay (approx. 15-30 seconds) between the meeting and the television broadcast/live stream.

Citizens can join the meeting to listen and provide public comment by entering the meeting link; clicking on the Agenda's highlighted link; clicking on the meeting date in the Event Calendar; or by calling in toll free at **1-877-309-2073** and entering the access code **763-403-773#** when prompted. Citizens will be muted upon entering the meeting until the public comment portion of the hearing. If you are joining the meeting while watching the television broadcast/live stream, please lower or mute the volume on your computer or television during public comment so that you may be heard clearly. Citizens may also provide written comment via postal mail or by emailing Liz Sturdy, Planning Department Administrator, at ***esturdy@truro-ma.gov***.

Meeting link: **https://meet.goto.com/763403773**

Public Comment Period

The Commonwealth's Open Meeting Law limits any discussion by members of the Board of an issue raised to whether that issue should be placed on a future agenda. Speakers are limited to no more than 5 minutes.

1. **Planner Report**

2. **Chair Report**

Board Action/Review (Continued)

2022-005/PB – Regan McCarthy seeks approval of Form A – Application for Determination that Plan Does Not Require Approval (ANR) pursuant to Section 2.2 of the Town of Truro Rules and Regulations Governing the Subdivision of Land with respect to property at 35A Higgins Hollow Road, Truro MA, Atlas Map 47, Parcel 2, Registry of Deeds title reference: Book 20807, Page 42. [***Material in 8/24/2022 and 9/21/2022 packets***]

- Requested extension of time to November 2, 2022

Board Action/Review

2022-006/PB – Matthew Bramble and Murray Bartlett seek approval of Form A – Application for Determination that Plan Does Not Require Approval (ANR) pursuant to Section 2.2 of the Town of Truro Rules and Regulations Governing the Subdivision of Land with respect to property at 31 and 33 Sylvan Lane, Truro MA, Atlas Map 43, Parcels 74 and 75, Registry of Deeds title reference: Books 33585 / 35191, Pages 120 / 48.

2022-010/SPR – Crown Castle/DISH Wireless, on property located at 344 Route 6 (Atlas Map 39, Parcel 172). Applicant seeks a Special Permit under Section 40.5 of the Truro Zoning Bylaw, and as an Eligible Facilities Request for a minor modification under Section 6409 and the rules of the Federal Communications Commission ("FCC"), to modify an existing tower: adding three (3) antennas, six (6) remote radio units, and one (1) over voltage protection device at the 122' centerline height on the tower, three (3) DC power cables, three (3) fiber trunks and one (1) radio cabinet in the existing fenced compound.

Development of Warrant Articles

- Updates
  - Street Definition
  - Lot Coverage/Site Clearing
  - Housing
  - Other

Interview of Potential Planning Board Members

- Confirm date & time
- Potential questions from Planning Board

Minutes

- September 7, 2022
- September 28, 2022 Work Session

Work Session: Wednesday, October 26, 2022 at 5:00 pm (Warrant Article)
Next Meeting: Wednesday, November 2, 2022 at 5:00 pm

Adjourn

TOWN OF TRURO
OCT 17 2022
10:23 AM
RECEIVED
TOWN CLERK

MEMORANDUM

To: Truro Planning Board

From: Barbara Carboni, Town Planner and Land Use Counsel

Date: October 17, 2022

Re: October 19, 2022 meeting

2022 2022-005/PB - Application (Form A) of Regan McCarthy for Determination that Plan Does Not Require Approval (ANR) under the Subdivision Control Law with respect to property known as 35A Higgins Hollow Road, located partly in the Seashore District and partly in the Residential District.

Update: As the Board will remember, the Applicant agreed to an extension of time for Board action on the ANR plan to allow the Applicant time to meet with the Cape Cod National Seashore regarding her rights under the Boundary Line Agreement and Right of Way permit.

Applicant's counsel has advised that discussions with the National Seashore are ongoing and has requested that the Board further consider the application at its meeting on November 2, 2022. The Applicant has agreed to extend the time for Board action through that date.

2022-010/SPR – Crown Castle/DISH Wireless, on property located at 344 Route 6 (Atlas Map 39, Parcel 172), seeking a special permit[1] under Section 40.5 of the Truro Zoning Bylaw and approval of an Eligible Facilities Request to install certain equipment on the cell tower.

The proposal is to install three antennas, six remote radio units and one "over voltage protection device" at a height of 122 feet on the tower, and three cables, three fiber trunks and one radio cabinet in the existing structure.

The original Structural Evaluation submitted with this application was a single page, which did not include information regarding the Risk Category applied (as there was with the Crown Castle/T-Mobile Structural Analysis Report). In addition, the page was signed by the engineer in July 2021, prior to the revised Structural Analysis recently provided to the Board in conjunction with the T-Mobile application.

The Applicant's representative has requested that the T-Mobile Structural Analysis be added to the record for this (Dish Wireless), application and considered by the Board in its review of the Dish Wireless request. It is possible, but not certain that the Board may use the T-Mobile Structural analysis for this purpose; it is hoped that discussion at the meeting will resolve this question.

---

[1] The application references Site Plan Review, but the relief required is a special permit. A form briefly available online referenced Site Plan Review, but has since been corrected.

2022-006/PB – Matthew Bramble and Murray Bartlett seek endorsement of an ANR plan with respect to property located at 31 and 33 Sylvan Lane (Atlas Map 43, Parcels 74 and 75)

The Applicant proposes to combine Lot 1 (31 Sylvan Lane, 88,358 square feet) and Lot 8 (33 Sylvan Lane, 31,332 square feet) as shown on the submitted Plan to form Lot 8A (total 119,690 square feet). Both are located in the Residential District; 31 Sylvan is unimproved; 33 Sylvan appears to be improved by a small structure. As requested by the Chair, the Applicant has provided additional information regarding the condition of Sylvan Lane. See email dated October 7, 2022.

The Form A states that an ANR endorsement is warranted where:

> "The division of the tract of land shown on the accompanying plan is not a 'subdivision' because it shows a proposed conveyance/other instrument, namely [removing an interior lot line and combining into 1 lot] which adds to/takes a way from/changes the size and shape of, lots in such a manner that no lot affected is left without frontage as required by the Truro Zoning Bylaw under Section 50.1(A), which requires 150 feet."

The resulting single Lot 8A would have over 150 feet of frontage on Sylvan Way, satisfying the above requirement.[2]

As the Board is aware, an ANR endorsement represents the Board's finding that what is proposed is not a "subdivision" as that term is defined in G.L. c. 41. A combination of lots, as proposed here, is one appropriate use of the ANR procedure (subject to the frontage requirement above). There would not appear to be any obstacles to endorsement of the Plan as Approval Not Required.

[2] A note on the Plan appropriately notes that the Planning Board's endorsement does not indicate that the lot is buildable or that it meets zoning, health, or general bylaw requirements.

Elizabeth Sturdy

From: Christopher Senie <csenie@senie-law.com>
Sent: Thursday, October 13, 2022 10:25 AM
To: Elizabeth Sturdy
Cc: Barbara Carboni
Subject: RE: 35A Higgins Hollow Road

Hi Liz,

Thanks. We look forward to being before the board on Nov 2nd.

Best,

Chris

From: Elizabeth Sturdy <ESturdy@truro-ma.gov>
Sent: Thursday, October 13, 2022 9:43 AM
To: Christopher Senie <csenie@senie-law.com>
Cc: Barbara Carboni <bcarboni@truro-ma.gov>
Subject: RE: 35A Higgins Hollow Road

Attorney Senie,

To confirm, the matter of 35A Higgins Hollow Road will be continued to the Board's meeting on Wednesday, November 2 at 5:00 pm, and that the timeframe with which the Board has to act on this ANR plan has been extended to that date of November 2, 2022.

Thank you,

Liz

From: Christopher Senie <csenie@senie-law.com>
Sent: Wednesday, October 12, 2022 3:34 PM
To: Elizabeth Sturdy <ESturdy@truro-ma.gov>; Barbara Carboni <bcarboni@truro-ma.gov>
Subject: RE: 35A Higgins Hollow Road

Hi Liz and Barbara,

Let's go with November 2nd. That gives us more time to work with the Seashore and submit documents one week ahead.

Let me know if that works.

Thanks.

Best,

Chris

From: Elizabeth Sturdy <ESturdy@truro-ma.gov>
Sent: Wednesday, October 12, 2022 2:18 PM
To: Christopher Senie <csenie@senie-law.com>; Barbara Carboni <bcarboni@truro-ma.gov>
Subject: RE: 35A Higgins Hollow Road

Elizabeth Sturdy

From: Regan McCarthy <regan.mccarthy@songmasters.org>
Sent: Wednesday, October 5, 2022 5:00 PM
To: Elizabeth Sturdy
Cc: Christopher Senie
Subject: Planning Board Remote Meeting/ Packet / October 12

Per your email to Atty Senie today, I am sending two access ways to a video which we tried to screen share this at the Sept 21 meeting and ran into technical difficulties. We promised to make this accessible to the Planning Board. It will be important for the PB to see this. It is tool arge a file for the Town's email to accept, and I can bring a copy over for downloading to the Town's ICloud if you want. Alternately, this can be accessed by the PB either by:

1. Send the link [below] to PB members, which will remain available through Oct 21, to this video for viewing and/or downloading.
2. Give the link to the Truro Organizer to show at the October 12th meeting.

Download Attachment
Available until Oct 21, 2022
Full link is here
https://www.icloud.com/attachment/?u=https%3A%2F%2Fcvws.icloud-content.com%2FB%2FATQ23H2wlbsSpUzgDrWDXRVrmMlPAacnm7dzLaQhQBUi0g9VEaYLuvGI%2F%24%7Bf%7D%3Fo%3DAhH62yj2qKplAO_pNGOtqmNoDOwATjlHEycpVI0o6aD-%26v%3D1%26x%3D3%26a%3DCAogECHH-HTIWzhXZAcMND2Qze9vyKITfLP2NJonkKlSOb4SdhCP55aFtjAYj_eR2b8wIgEAKgkC6AMA_yOvpwFSBGuYyU9aBAu68YhqJWIsxWHx7ifuTJmof_lydvglYxOX3qGTMbrUZSwGx0HCEDLG3LpyJXmvfol_ISo6cbopNfTEU1iNR0nZEOWxyc8zrTAo1GEwZd0YMyM%26e%3D1666365815%26fl%3D%26r%3D7BAE86B1-1F76-4986-83CB-01FA5E0F6A62-1%26k%3D%24%7Buk%7D%26ckc%3Dcom.apple.largeattachment%26ckz%3D2B9365A1-4E65-4B6C-8838-260FA9B1C77A%26p%3D57%26s%3DzLBfd5OlRJOY8jbD0bya3QiyRfI&uk=Hlvd_UQ5MBTKCuy5R00xog&f=IMG_1904.MOV&sz=130836738

Attorney Senie will contact you about handling other items for the Oct 12th meeting.

Thanks and much appreciated - Regan

CAUTION: This email originated from outside of the organization. Do not click links or open attachments unless you recognize the sender and know the content is safe.

Town of Truro Planning Board

P.O. Box 2030, Truro, MA 02666

FORM A

APPLICATION FOR DETERMINATION THAT PLAN DOES NOT REQUIRE APPROVAL (ANR)

To the Planning Board of the Town of Truro, MA Date SEPTEMBER 30, 2022

The undersigned owners of all the land described herein submitted the accompanying plan entitled: PLAN OF LAND IN TRURO, AS SURVEYED FOR MATTHEW D. BRAMBLE & MURRAY J. BARTLETT and dated AUGUST 8, 2022, requests a determination and endorsement by said Board that approval by it under the Subdivision Control Law is not required.

Property Location: 31 & 33 SYLVAN LANE Map(s) and Parcel(s): MAP 43 PARCELS 74 & 75

Number of Lots Created: ONE Total Land Area: LOT 8A = 119,690 ± SQ. FT; 2.748 ± acres

The owner's title to said land is derived under deed from ① JULIANNE BRITT ② SUSAN H. ARESON, dated ① JUNE 14, 2022 ② DECEMBER 1, 2020, and recorded in the Barnstable Registry of Deeds Book and Page 35191/48 ② 33585/120 or Land Court Certificate of Title No. N.A. registered in Barnstable County.

The undersigned believes that such approval is not required for the following reasons: *(check as appropriate)*

☐ The accompanying plan is not a subdivision because the plan does not show a division of land.

☐ The division of the tract of land shown on the accompanying plan is not a subdivision because every lot shown on the plan has frontage of at least such distance as is presently required by the Truro Zoning Bylaw under Section 50.1(A) which requires 150 feet for erection of a building on such lot; and every lot shown on the plan has such frontage on:

- ☐ a public way or way which the Town Clerk certifies is maintained and used as a public way, namely _____, or
- ☐ a way shown on a plan theretofore approved and endorsed in accordance with the subdivision control law, namely _____ on _____ and subject to the following conditions _____; or
- ☐ a private way in existence on December 8, 1955, the date when the subdivision control law became effective in the Town of Truro having, in the opinion of the Planning Board, sufficient width, suitable grades, and adequate construction to provide for the needs of vehicular traffic in relation to the proposed use of the land abutting thereon or served thereby, and for the installation of municipal services to serve such land and the buildings erected or to be erected thereon, namely _____.

☑ The division of the tract of land shown on the accompanying plan is not a "subdivision" because it shows a proposed conveyance/other instrument, namely REMOVING AN INTERIOR LOT LINE AND COMBINING INTO 1 LOT which adds to/takes away from/changes the size and shape of, lots in such a manner that no lot affected is left without frontage as required by the Truro Zoning Bylaw under Section 50.1(A), which requires 150 feet.

☐ The division of the tract of land shown on the accompanying plan is not a subdivision because two or more buildings, specifically _____ buildings were standing on the property prior to December 8, 1955, the date when the subdivision control law went into effect in the Town of Truro and one of such buildings remains standing on each of the lots/said buildings as shown and located on the accompanying plan. Evidence of the existence of such buildings prior to the effective date of the subdivision control law as follows:

_____

_____

_____

_____

☐ Other reasons or comments: *(See M.G. L., c.41, §81-L)*

_____

_____

_____

_____

All other information as required in the Rules and Regulations Governing Subdivisions of Land shall be submitted as part of the application.

* MATTHEW D. BRAMBLE (Printed Name of Owner)	Matthew D. Bramble (Signature)
* MURRAY J. BARTLETT (Printed Name of Owner)	Murray J. Bartlett (Signature)
P.O. BOX 483, Provincetown, MA 02657 (Address of Owner(s))	(Address of Owner(s))
WILLIAM N. ROGERS II (Printed Name of Agent)	(Signature)
41 OFF CEMETERY ROAD, P.O. BOX 631, PROVINCETOWN, MA 02657 (Address of Agent)	

File twelve (12) copies each of this form and applicable plan(s) with the Town Clerk; and a complete copy, including all plans and attachments, submitted electronically to the Town Planner at planner1@truro-ma.gov

From: Billy Rogers
To: Elizabeth Sturdy
Subject: Re: 31, 33 Sylvan Lane, Truro - Subdivision Plan A.N. R.
Date: Friday, October 7, 2022 11:50:46 AM

Ms. Anne Greenbaum, Chairman
Truro Planning Board
Town Hall
Truro, Massachusetts

Re: Sylvan Lane
Truro, Massachusetts

Dear Ms. Greenbaum:

Pursuant to your recent request regarding the Status of Condition of the Travelled Surface on Sylvan Lane, I have performed a visual inspection this date and am presenting my findings forthwith:

Please be advised of the following:

1. The "Sylvia Epstein" Subdivision Plan was Approved by the Truro Planning Board on May 24, 1966.

2. The existing Traveled Surface is Pavement in front of 33 Sylvan Lane.

3. Sylvan Lane is a long Subdivision Road. It exists of a dense graded crushed stone / gravel & hardening surface from entrance at Whitmanville Road to our Locus.

4. There did not appear to be any Drainage Structures in-place.

If I can be of any further assistance to you on this matter, please do not hesitate to contact me.

Respectfully submitted,

William N. Rogers II, PE, PLS

2.2 - APPROVAL NOT REQUIRED (ANR) PLAN ENDORSEMENT REVIEW CHECKLIST - Applicant

Address: 31 & 33 Sylvan Lane, Trurd **Applicant Name:** William N. Rogers II **Date:** September 30, 2022

No.	Requirement	Included	Not Included	Explanation, if needed
2.2.2 Submission Requirements				
Any person may submit a plan seeking endorsement that the plan does not require approval under the Subdivision Control Law by providing the Board with the following:				
a.	A properly executed application for Approval Not Required Endorsement (Form A).	✓		
b.	Ten (10) paper prints of the plan. Said plan shall be prepared in such a manner as to meet the Registry of Deeds and/or Land Court requirements for recording and shall contain the following information:	✓		
b.1	The boundaries, area, frontage and dimensions of the lot or lots for which ANR endorsement is sought.	✓		
b.2	The date of the plan, scale, north arrow and assessor's map and parcel number of all land shown on the plan and directly abutting the land shown on the plan.	✓		
b.3	The name(s) of the owner(s) of record of the lots shown on the plan and of the applicant, together with the name, address seal and signature of the land surveyor who prepared the plan.	✓		
b.4	Relevant zoning classification data.			
b.5	A locus plan containing sufficient information to locate the land and showing streets bounding or providing access to the property.	✓		
b.6	The name(s) of the way(s) on which the lots front, information as to ownership of the way(s) and the physical condition of the way(s) including actual width, surface type and condition.	✓		
b.7	The location and dimension of any natural features which might affect the use of the frontage for access.	✓		
b.8	The location, including setbacks to all lot lines, of all buildings and other structures on the proposed ANR lots shown on the plan.	✓		
b.9	The location of any wetland on the land shown on the plan or within one hundred (100) feet of its boundaries.	✓		
b.10	The location of all bounds and easements on the proposed ANR lots shown on the plan.	✓		

2.2 - APPROVAL NOT REQUIRED (ANR) PLAN ENDORSEMENT REVIEW CHECKLIST - Applicant

Address: 31&33 Sylvan Lane, Topsfield Applicant Name: [illegible] Date: September 30, 2022

No.	Requirement	Included	Not Included	Explanation, if needed
b.11	The statement "Approval under the Subdivision Control Law Not Required", and sufficient space for the date of the application submittal and the date of endorsement, docket number and the signatures of all Board members.	✓		
b.12	The statement "Planning Board endorsement of this plan indicates only that the plan is not a subdivision under MGL, Chapter 41, Section 81-L and does not indicate that a lot is buildable or that it meets Zoning, Health or General Bylaw requirements."	✓		

PLAN BOOK 203 PAGE 115

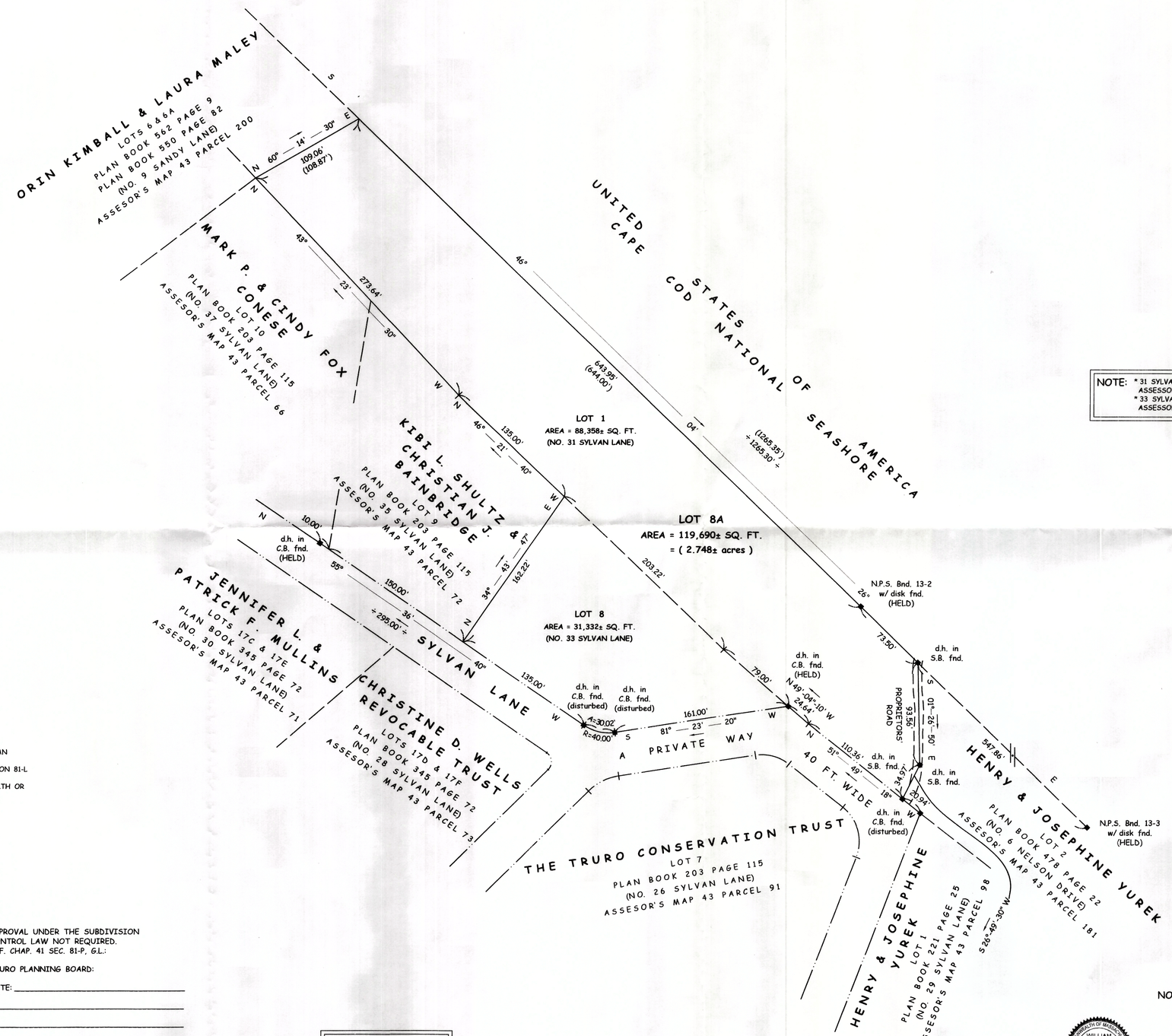

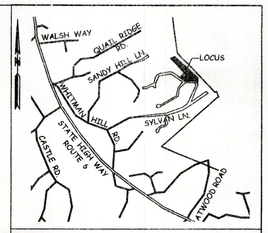

LOCUS MAP SCALE: 1" = 1500'

NOTE: * 31 SYLVAN LANE ASSESSOR'S MAP 43 PARCEL 75
* 33 SYLVAN LANE ASSESSOR'S MAP 43 PARCEL 74.

ZONING CLASSIFICATION:
LOT 8A IS LOCATED IN RESIDENTIAL DISTRICT.

ZONING CLASSIFICATION TABLE	
ZONING REQUIREMENT	LOT 8A PROPOSED
LOT SIZE 33,750± SQ. FT.	119,690± SQ. FT.
MIN. FRONTAGE 150 FT.	461.02 FT.
FRONT YD. SETBACK 25 FT.	N.A.
SIDE YD. SETBACK 25 FT.	N.A.
LOT COVERAGE	N.A.
WETLAND AREA	- 0 -

NOTE: PLANNING BOARD ENDORSEMENT OF THIS PLAN INDICATES ONLY THAT THE PLAN IS NOT A SUBDIVISION UNDER MGL, CHAPTER 41, SECTION 81-L AND DOES NOT INDICATE THAT A LOT IS BUILDABLE OR THAT IT MEETS ZONING, HEALTH OR GENERAL BYLAW REQUIREMENTS.

I CERTIFY THAT THIS PLAN HAS BEEN PREPARED IN CONFORMITY WITH THE RULES AND REGULATIONS OF THE REGISTERS OF DEEDS OF THE COMMONWEALTH OF MASSACHUSETTS.

August 8, 2022 William N. Rogers II, PE, PLS

APPROVAL UNDER THE SUBDIVISION CONTROL LAW NOT REQUIRED.
REF. CHAP. 41 SEC. 81-P, G.L.:

TRURO PLANNING BOARD:

DATE: _____

LEGEND:

D.M.H. = DRAINAGE MANHOLE
M.H. = MANHOLE
S.M.H. = SEWER MANHOLE
W = WATER GATE
T.P. = UTILITY POLE
U/G = UNDERGROUND
L.P. = LIQUID PROPANE

NOTE: LOT 8 & LOT 1 ARE TO BE COMBINED TO FORM LOT 8A.

COMMONWEALTH OF MASSACHUSETTS
WILLIAM N. ROGERS II
No. 28410
REGISTERED PROFESSIONAL LAND SURVEYOR

William N. Rogers II, PE, PLS
August 8, 2022

NOTE: ALL BUILDING OFFSETS ARE MEASURED PERPENDICULAR TO THE PROPERTY LINES.

NOTE: () DENOTES RECORD INFORMATION.

REFERENCE:
PLAN BOOK 478 PAGE 22
PLAN BOOK 203 PAGE 115
DEED BOOK 35191 PAGE 48
DEED BOOK 33585 PAGE 120

SCALE OF FEET
0 25 50 100

PLAN OF LAND
IN
TRURO
AS SURVEYED FOR

MATTHEW D. BRAMBLE &
MURRAY J. BARTLETT

SCALE: 1 IN. = 50 FT. AUGUST, 2022

WILLIAM N. ROGERS
PROFESSIONAL
CIVIL ENGINEERS & LAND SURVEYORS
41 OFF CEMETERY ROAD, PROVINCETOWN, MASS.
508.487.1565 / 508.487.5809 FAX

T-22-2182

CROWN CASTLE

1 Cityplace Dr, Suite 490
Creve Coeur, MO 63141

Phone: (314) 513-0147
www.crowncastle.com

July 15th, 2022

Barbara Carboni, Town Planner
Truro Town Hall
24 Town Hall Road
P.O. Box 2030
Truro, MA 02666

RE:

Notice of Application for Site Plan Review for DISH Wireless Telecommunication Co-location
Crown Site ID#841273; DISH Site ID# BOSOS00592A
344 Route 6, Truro, MA

Dear Ms. Carboni

Attached is an application for Site Plan Review, for a new wireless collocation on an existing Crown Castle owned lattice tower located at 344 Route 6, Truro.

DISH officially entered the wireless retail space on July 1, 2020. Today, DISH Wireless is the fourth-largest wireless carrier in the United States with 8.9 million subscribers. DISH provides wireless voice and data services in the United States under the Boost Mobile brand and will provide services under its own brand after its network is built. This Application brought forth pertains to DISH's network build.

This collocation of new Transmission Equipment is for a Wireless Communications Facility ("Facility") located at the Site. The installation consists primarily of the following: adding three (3) antennas, six (6) remote radio units, and one (1) over voltage protection device at the 122' centerline height on the tower, three (3) DC power cables, three (3) fiber trunks and one (1) radio cabinet in the existing fenced compound, as depicted in the attached stamped plans.

Please feel free to contact me with any questions, and I look forward to working with you.

Sincerely,

Katie Adams

Katie Adams
Crown Castle, Agent for DISH Wireless
kadams@nbcllc.com
(781) 392-7547

4545 E River Rd, Suite 320
West Henrietta, NY 14586

Phone: (585) 445-5896
Fax: (724) 416-4461
www.crowncastle.com

Crown Castle Letter of Authorization

MA - TOWN OF TRURO
Planning Department
24 TOWN HALL ROAD
TRURO, MA 02666

Re: Application for Zoning/Building Permit
Crown Castle telecommunications site at:
344 ROUTE 6, NORTH TRURO, MA 02652

NCWPCS MPL 24 - YEAR SITES TOWER HOLDINGS LLC ("Crown Castle") hereby authorizes DISH Wireless LLC, including their Agent, to act as our Agent in the processing of all zoning applications, building permits and approvals through the TOWN OF TRURO for the existing wireless communications site described below:

Crown Site ID/Name:	**841273/TRURO**
Customer Site ID:	**BOBOS00592A/MA-CCI-T-841273**
Site Address:	**344 ROUTE 6, NORTH TRURO, MA 02652**

Crown Castle

By: _____ Date: 7/15/2022

Richard Zajac
Site Acquisition Specialist

100 Apollo Drive Suite 303
Chelmsford, MA 01824

Phone: (360) 561-3311
www.crowncastle.com

October 3rd, 2022

Town Planner
Truro Town Hall
24 Town Hall Road
P.O. Box 2030
Truro, MA 02666

************NOTICE OF ELIGIBLE FACILITIES REQUEST************

RE: Request for Minor Modification to Existing Wireless Facility – Section 6409
Site Address: 344 Route 6, Truro, MA
Crown Site ID#841273; DISH Site ID# BOSOS00592A

Planning Board:

On behalf of DISH Wireless L.L.C. (”Dish Wireless” or “Applicant”), Crown Castle USA Inc. (“Crown Castle”) is pleased to submit this request to modify the existing wireless facility noted above through the collocation, replacement and/or removal of the Applicant’s equipment as an eligible facilities request for a minor modification under Section 6409[1] and the rules of the Federal Communications Commission (“FCC”).[2]

Section 6409 mandates that state and local governments must approve any eligible facilities request for the modification of an existing wireless tower or base station that does not substantially change the physical dimensions of such tower or base station. Under Section 6409, to toll the review period, if the reviewing authority determines that the application is incomplete, it must provide written notice to the applicant within 30 days, which clearly and specifically delineates all missing documents or information reasonably related to whether the request meets the federal requirements.[3] Additionally, if a state or local government, fails to issue any approvals required for this request within 60 days, these approvals are deemed granted. The FCC has clarified that the 30-day and 60-day deadlines begins when an applicant: (1) takes the first step required under state or local law; and (2) submits information sufficient to inform the jurisdiction that this modification qualifies under the federal law[4]. Please note that with the submission of this letter and enclosed items, the thirty and sixty-day review periods have started. Based on this filing, the deadline for written notice of incomplete application is November 2nd, 2022, and the deadline for issuance of approval is December 2nd, 2022.

The proposed scope of work for this project includes:
Collocation of antennas, ancillary equipment and ground equipment as per plans for a new carrier on an existing wireless communication facility.

At the end of this letter is a checklist of the applicable substantial change criteria under Section 6409. Additionally, please find enclosed the following information in support of this request:

---

[1] Middle Class Tax Relief and Job Creation Act of 2012, Pub. L. No. 112-96, § 6409 (2012) (codified at 47 U.S.C. § 1455).
[2] *Acceleration of Broadband Deployment by Improving Wireless Facility Siting Policies*, 29 FCC Rcd. 12865 (2014) (codified at 47 CFR § 1.6100); and *Implementation of State & Local Governments’ Obligation to Approve Certain Wireless Facility Modification Requests Under Section 6409(a) of the Spectrum Act of 2012*, WT Docket No. 19-250 (June 10, 2020).
[3] *See* 47 CFR § 1.6100 (c)(3). [4] *See* 2020 Upgrade Order at paragraph 16.

100 Apollo Drive Suite 303
Chelmsford, MA 01824

Phone: (360) 561-3311
www.crowncastle.com

(1) Application for Special Use Permit;
(2) Construction Drawings;
(3) Structural Analysis; and
(4) Section 6409 Substantial Change Checklist.

As these documents indicate, (i) the modification involves the collocation, removal or replacement of transmission equipment; and (ii) such modification will not substantially change the physical dimensions of such tower or base station. As such, it is an "eligible facilities request" as defined in the FCC's rules to which the 60-day deadline for approval applies. Accordingly, Applicant requests all authorization necessary for this proposed minor modification under Section 6409.

Our goal is to work with you to obtain approvals earlier than the deadline. We will respond promptly to any request for related information you may have in connection with this request. Please let us know how we can work with you to expedite the approval process. We look forward to working with you on this important project, which will improve wireless telecommunication services in your community using collocation on existing infrastructure. If you have any questions, please do not hesitate to contact me.

Regards,

Katie Adams

Katie Adams
Site Acquisition Specialist
Crown Castle
Agent for Applicant
(781) 392-7547
kadams@nbcllc.com

100 Apollo Drive Suite 303
Chelmsford, MA 01824

Phone: (360) 561-3311
www.crowncastle.com

Section 6409 Substantial Change Checklist
Towers Outside of the Public Right of Way

The Federal Communications Commission has determined that a modification substantially changes the physical dimension of a wireless tower or base station under 47 U.S.C. § 1455(a) if it meets one of six enumerated criteria under 47 C.F.R. § 1.6100.

Criteria for Towers Outside the Public Rights of Way

YES/NO **NO**	Does the modification increase the height of the tower by more than the greater of: (a) 10% (b) or, the height of an additional antenna array plus separation of up to 20 feet from the top of the nearest existing antenna?
YES/NO **NO**	Does the modification add an appurtenance to the body of the tower that would protrude from the edge of the tower more than 20 feet or more than the width of the tower structure at the level of the appurtenance, whichever is greater?
YES/NO **NO**	Does the modification involve the installation of more than the standard number of new equipment cabinets for the technology involved or add more than four new equipment cabinets?
YES/NO **NO**	Does the modification entail any excavation or deployment outside the current site by more than 30 feet in any direction, not including any access or utility easements?
YES/NO **NO**	Does the modification defeat the concealment elements of the eligible support structure?
YES/NO **NO**	Does the modification violate conditions associated with the siting approval with the prior approval the tower or base station other than as specified in 47 C.F.R. § 1.6100(c)(7)(i) – (iv)?

If all questions in the above section are answered "NO," then the modification does not constitute a substantial change to the existing tower under 47 C.F.R. § 1.6100.

Town of Truro Planning Board

P.O. Box 2030, Truro, MA 02666

APPLICATION FOR TELECOMMUNICATION STRUCTURES, BUILDINGS AND APPURTENANCES SITE PLAN REVIEW

To the Town Clerk and the Planning Board of the Town of Truro, MA Date 7/15/2022

The undersigned hereby files an application with the Truro Planning Board for the following:

☒ ***Site Plan Review*** pursuant to §40.5 of the Truro Zoning Bylaw

1. General Information

Description of Property and Proposed Project DISH Wireless collocation on an existing Lattice Tower located at 344 Route 6. DISH to install 3 panel antennas and ancillary equipment on the existing tower, with a 5'x7' pad for equipment cabinet on the ground, within the existing compound, as per plans.

Property Address 344 Route 6, Truro Map(s) and Parcel(s) 39-172-A

Registry of Deeds title reference: Book _____, Page _____, or Certificate of Title Number _____ and Land Ct. Lot # _____ and Plan # _____

Applicant's Name Katie Adams on behalf of Crown Castle (Written Permission attached)

Applicant's Legal Mailing Address 100 Apollo Drive, Suite 303, Chelmsford MA 01824

Applicant's Phone(s), Fax and Email 781-392-7547 kadams@nbcllc.com

Applicant is one of the following: *(please check appropriate box)*

*Written Permission of the owner is required for submittal of this application.

☐ Owner ☐ Prospective Buyer* ☒ Other*

Owner's Name and Address Crown Castle 4545 E. River Rd. Suite 320, West Henrietta, NY 14586

Representative's Name and Address Richard Zajac 4545 E. River Rd. Suite 320, West Henrietta, NY 14586

Representative's Phone(s), Fax and Email 585-445-5896 Richard.Zajac@crowncastle.com

2. Waiver(s) Request – The Planning Board may, upon the request of the applicant, pursuant to §70.3.E, waive requirements of §40.5, provided that in the opinion of the Planning Board such a waiver would not be detrimental to the public interest, cause the Town any expense, or be inconsistent with the intent and purpose of this Bylaw. A request for a waiver by the applicant shall be accompanied by a reasonable explanation as to why the waiver is being requested. If multiple waivers are requested, the applicant shall explain why each waiver is requested.

- The applicant is ***advised*** to consult with the Building Commissioner, Planning Department, Conservation Department, and/or Health Department prior to submitting this application.

Signature(s)

Katie Adams

Applicant(s)/Representative *Printed* Name(s) — Owner(s) *Printed* Name(s) or written permission

Katie Adams

Applicant(s)/Representative *Signature(s)* — Owner(s) *Signature(s)* or written permission

Your signature on this application authorizes the Members of the Planning Board and town staff to visit and enter upon the subject property.

40.5 - COMMUNICATION STRUCTURES, BUILDINGS AND APPURTENANCES - Applicant

Address: 344 Route 6 **Applicant Name:** Katie Adams c/o Crown Castle **Date:** 7/15/2022.

No.	Requirement	Included	Not Included	Explanation, if needed
B. Requirements				
1	All building permits for a communications structure, building or appurtenance shall require a special permit from the Planning Board.			seeking SP
2	The minimum distance from the perimeter of the communications structure to any property line shall be the height of the structure including any antennas or appurtenances, plus ten (10) feet. The minimum distance from any guy wire, anchor or brace to any property line shall be the length of the guy wire or brace plus ten (10) feet. The setbacks for a communications building shall comply with the setback requirements of the zoning district.	x		
3	The communications structure, building or appurtenance shall be installed, maintained and operated in accordance with all applicable federal, state, county and local codes, standards and regulations and shall be designed to withstand sustained winds and gusts of a category 5 hurricane. If Federal Aviation Administration (FAA) or Federal Communications Commission (FCC) regulations are changed, then the owner or operator shall bring the structure, building and appurtenances into compliance with the new regulations within six (6) months of the effective date of such regulations or earlier if a more stringent compliance schedule is included in the regulation. Failure to comply with any new regulations shall be grounds for the removal of non-complying structures, buildings and appurtenances at the owner's expense.	x		
4	The height of the communications structure (tower) shall be no greater than one hundred and fifty (150 feet) above ground level.			n/a - tower existing
5	Communication antennas shall be located on pre-existing structures unless the applicant demonstrates that there are no feasible pre-existing structures. The installation shall preserve the character of such pre-existing structures.	x		
6	If the applicant has demonstrated that there are no feasible pre-existing structures to support antennas and appurtenances for the intended use, then any communications structure, building or appurtenance may be sited on public land.			n/a

40.5 - COMMUNICATION STRUCTURES, BUILDINGS AND APPURTENANCES - Applicant

Address: 344 Route 6 **Applicant Name:** Katie Adams c/o Crown Castle **Date:** 7/15/2022.

No.	Requirement	Included	Not Included	Explanation, if needed
7	To the extent lawful and feasible, all service providers shall co-locate on a single tower. Towers shall be designed to structurally accommodate the maximum number of foreseeable users (within a ten-year period) technically practicable. The applicant is required to document all co-location tenants and provide a tower design indicating types and location of all facilities.	x		
8	New facilities or structures shall be considered only upon a finding by the Planning Board that existing or approved facilities or structures cannot accommodate the wireless communications equipment planned for the proposed tower.			n/a
9	The installation of a communications structure, building or appurtenance shall be designed to minimize visual impact; the maximum amount of natural vegetation shall be preserved; details of construction and finish shall blend with the surroundings; additional vegetative screening shall be employed where practical and particularly to screen abutting residential property whether developed or not. A detailed landscape plan will be required with the application.	x		
10	Location and siting of facilities and structures shall be consistent with any regional location and siting criteria established by the Cape Cod Commission.			n/a
11	Under normal operating conditions, noise emanating from the communications structure, building or appurtenance shall not be greater at the boundary of the lot on which it is sited than would otherwise exist in the absence of these facilities.	x		
12	No hazardous waste shall be discharged on the site. Any storage of fuel shall be in compliance with the Board of Health regulations. Documentation shall be provided for the contents of all communications buildings and/or cabinets.			n/a
13	All run-off of storm water from communications structures, buildings, and appurtenances, driveways and parking areas shall be contained on site; the amount of impervious surface on the site shall be minimized.	x		
14	Lighting, when required and permitted by the FAA or the Planning Board, shall be directed inward so as not to project onto surrounding properties.			n/a

40.5 - COMMUNICATION STRUCTURES, BUILDINGS AND APPURTENANCES - Applicant

Address: 344 Route 6 **Applicant Name:** Katie Adams c/o Crown Castle **Date:** 7/15/2022.

No.	Requirement	Included	Not Included	Explanation, if needed
15	All structures, buildings or appurtenances must be secured to control access. Fencing materials shall be consistent with the character of abutting properties, with a locked gate and proper warning signals. A sign must be displayed indicating the name of the owner(s) and a 24 hour contact number. Only signs limited to safety will be allowed. Fencing is not required for antennas or other appurtenances mounted on a pre-existing structure.			n/a
16	As a condition of approval of the application the applicant shall agree, by execution of a covenant, to remove within six months any communications structure and building which has not operated for four consecutive months unless the cause is major damage which prohibits operation. In the event that major damage has rendered the facility inoperative, repair or removal of the facility shall begin within six months and be completed within an additional six months. Failure to comply with the conditions of the covenant shall be grounds for the removal of structures, buildings and appurtenances. Complete restoration of the site shall be at the owner(s) expense, secured by a bond from a recognized financial institution. The covenant shall include, also at the owner(s) expense, provision for liability insurance for any damage to any abutting property whether developed or not.	x		
17	At least forty-five (45) days before submitting an application for a special permit for the installation of a communications structure, building or appurtenance the applicant shall consult with the Planning Board. The purpose of the consultation is to facilitate the permitting process by the exchange of information between the applicant and the Planning Board, and for the applicant to obtain a detailed description of the information and documentation required, in writing, by the Planning Board, in order to clarify and resolve concerns of the Board and minimize potential problems with the application.	x		
18	The Planning Board shall hold a public hearing within sixty-five (65) days of the filing of an application and shall issue a decision within ninety (90) days following the date of the public hearing.			
19	The applicant shall submit the following written information to the Planning Board:			

40.5 - COMMUNICATION STRUCTURES, BUILDINGS AND APPURTENANCES - Applicant

Address: 344 Route 6 **Applicant Name:** Katie Adams c/o Crown Castle **Date:** 7/15/2022.

No.	Requirement	Included	Not Included	Explanation, if needed
19.a.	A survey of all sites for the installation of communications structures, buildings or appurtenances which are feasible for providing the intended services. The survey shall include a rationale for the selection of a prime and at least one alternative site. All sites in Truro shall be located on the appropriate sheet(s) of the Truro Assessor's Atlas;			n/a
19.b.	A survey of all pre-existing structures which are capable of supporting the equipment necessary to provide the intended service and a technical report which demonstrates why any such structure cannot be used by the applicant;			n/a
19.c.	The radiation pattern of all proposed antennas showing the frequency and intensity of radiation at ground level and at 30 feet above ground level. At the expense of the applicant, Electro Magnetic Field (EMF) readings shall be provided to the Board of Health yearly and immediately after any addition to the facility;	x		
19.d.	The sound level in decibels at ground level, at 30 feet above ground level and at the top of the facility and 10, 50, 100 and 500 feet from the communications structure, building or appurtenances for wind velocities between calm and 100 miles per hour with all equipment operating at normal levels, including before condition measured, after condition prediction and cumulative condition (with co-location) prediction;			n/a
19.e.	A delineation of the Assessor's Atlas of all areas in Truro which will not be served by the proposed installation for the prime and an alternative site;			n/a
19.f.	A statement of the services to be supported by the proposed communications structure, building or appurtenance;	x		
19.g.	Plans of special design features and materials, including landscaping, to minimize the visual impact of proposed communications structures, buildings and appurtenances. Site plans, elevations and fall zone should be included;			n/a
19.h.	A certification that the applicant has complied with all federal (including FAA), state and regional requirements to provide the proposed service and demonstration of compliance with the FCC guidelines for EMF's under National Environmental Policy Act (NEPA), including copies of the FCC Form 600, plus Environmental Assessment/Environmental Impact Statements as applicable;	x		

40.5 - COMMUNICATION STRUCTURES, BUILDINGS AND APPURTENANCES - Applicant

Address: 344 Route 6 **Applicant Name:** Katie Adams c/o Crown Castle **Date:** 7/15/2022.

No.	Requirement	Included	Not Included	Explanation, if needed
19.i.	Within thirty (30) days after the application filing, the applicant shall arrange to fly a three-foot-diameter balloon at the primary and an alternate site at the maximum height of the proposed installation. The date and location of the flights shall be advertised at least 14 days, but not more than 21 days before the flights, in a newspaper with a general circulation in Truro. Photos shall be provided from all strategic viewing points, per agreement with the Planning Board prior to flight.			n/a
20	If a communications structure, building or appurtenance is to be installed on a pre-existing private structure or on land or a structure owned, prior to the effective date of the bylaw, by the Commonwealth of Massachusetts, or on land or a structure owned by the Town of Truro, the applicant shall submit the following written information to the Planning Board:			
20.a.	A draft contract, including requirements for removal of all structures and for complete site restoration in the case of discontinued use, between the applicant and the owner (if different from the applicant).			
20.b.	A description of the proposed facility at the proposed prime and alternate sites including:			n/a
	i) Height of the facility and its associated equipment and antennas;			
	ii) Access roads and power supplies;			
	iii) Type, size and number of transmitters;			
	iv) A list of all fuels to be used on the site and a detailed description of how each shall be contained.			
20.c.	A site plan (scale not less than 1 inch=40 feet), showing the proposed facility, fall zones, existing and proposed contour elevations, 100-year flood zones, water resources, Zones of Contribution, waterways, wetlands and all associated equipment and structures on the site, including elevations of all equipment and structures with sufficient detail to delineate the external finish of all structures and equipment; and			
20.d.	A landscape plan showing the proposed site before and after development, including topography and screening proposed to protect abutters.			
21	For all applications other than those set forth in § 40.5.B.20 above, the applicant shall submit the following written information to the Planning Board:			

40.5 - COMMUNICATION STRUCTURES, BUILDINGS AND APPURTENANCES - Applicant

Address: 344 Route 6 **Applicant Name:** Katie Adams c/o Crown Castle **Date:** 7/15/2022.

No.	Requirement	Included	Not Included	Explanation, if needed
21.a.	A statement of the purpose for which the application is made.	x		
21.b.	The exact legal name of each person seeking a special permit and the address and telephone number or principal place of business of each such person.	x		
21.c.	The name, title, address and telephone number of the attorney or other person to whom correspondence or communications in regard to the application are to be addressed. Notice, orders, and other papers may be served upon the person so named, and such service shall be deemed to be service upon the applicant;	x		
21.d.	A statement of the need for the proposed facility with as much specific information as is practicable to demonstrate the need, including description of the proposed system and how the proposed facility would eliminate or alleviate any existing deficiency or limitation, including all co-location facilities;			n/a
21.e.	A statement of the benefits expected from the proposed facility with as much information as is practicable;			n/a
21.f.	A description of the proposed facility at the proposed prime and alternate sites including:			n/a
	i) Height of the facility and its associated equipment and antennas;			
	ii) Access roads and power supplies;			
	iii) Special design features and materials, including landscape plans;			
	iv) Type, size and number of transmitters and receivers, as well as the signal frequency, power output, and power density at the tower base, site boundary, and building where people might be exposed to the maximum power densities from the facility;			
	v) A map showing any fixed facilities with which the proposed facility would interact;			
	vi) The coverage signal strength, and integration of the proposed facility with any adjacent fixed facility, to be accompanied by a network plan showing interfaces with any adjacent service areas;			
	vii) A forecast of when maximum capability would be reached for the proposed facility and for facilities that would be integrated with the proposed facility;			
	viii) Documentation of contents of communications buildings and/or cabinets.			

40.5 - COMMUNICATION STRUCTURES, BUILDINGS AND APPURTENANCES - Applicant

Address: 344 Route 6 **Applicant Name:** Katie Adams c/o Crown Castle **Date:** 7/15/2022.

No.	Requirement	Included	Not Included	Explanation, if needed
21.g.	A description of the proposed prime and alternative site, including:			N/a
	i) The most recent U.S.G.S. topographic quadrangle map (scale 1 inch = 2,000 feet) marked to show the site of the facility and any significant changes within a one-mile-radius of the site;			
	ii) A map (scale not less than 1 inch = 200 feet) of the lot or tract on which the facility is proposed to be located, showing the acreage and dimensions of such site, the name and location of adjacent public and private roads or the nearest public road, and the names of abutting owners and portions of their lands abutting the site;			
	iii) A site plan (scale not less than 1 inch = 40 feet), showing the proposed facility, fall zones, existing and proposed contour elevations, 100-year flood zones, water resources, Zones of Contribution, waterways, wetlands and all associated equipment and structures on the site, including elevations of all equipment and structures with sufficient detail to delineate the external finish of all structures and equipment;			
	iv) Where relevant, a terrain profile showing the proposed facility and access road and existing and proposed grades; and			
	v) The most recent aerial photograph (scale not less than 1 inch = 1,000 feet) showing the proposed site, access roads and all abutting properties.			
21.h.	A statement explaining mitigation measures for the proposed facility including:			N/a
	i) Construction techniques designed specifically to minimize adverse effects on natural areas and sensitive areas;			
	ii) Special design features made specifically to avoid or minimize adverse effects on natural areas and sensitive areas;			
	iii) Establishment of vegetation proposed near residential, recreation, and scenic areas;			
	iv) Special design features made specifically so that the proposed structures, buildings and appurtenances shall blend with pre-existing structures and buildings;			
	v) Methods for preservation of vegetation for wildlife habitat and screening;			

40.5 - COMMUNICATION STRUCTURES, BUILDINGS AND APPURTENANCES - Applicant

Address: 344 Route 6 **Applicant Name:** Katie Adams c/o Crown Castle **Date:** 7/15/2022.

No.	Requirement	Included	Not Included	Explanation, if needed
	vi) A list of all fuels to be used on the site and a detailed description of how each shall be contained; and			
	vii) A statement describing any hazardous materials or wastes (including quantities) to be used or generated on the site.			
21.i.	A description of the existing and planned land uses of the proposed prime and alternative sites and surrounding areas;			
21.j.	A description of the scenic, natural, historic, and recreational characteristics of the proposed prime and alternative sites and surrounding areas;			
21.k.	Sight-line graphs to the proposed prime and alternative sites from visually impacted areas (a site from which the facility can be seen) such as residential developments, recreational areas, and historic sites;			
21.l.	A list describing the type and height of all existing and proposed communication structures, buildings and appurtenances within a ten-mile radius within the search area, or within any other area from which use of the proposed prime or alterative structure might be feasible from a location standpoint for purposes of the application;			
21.m.	A description of efforts to share existing and proposed structures, or consolidate telecommunications antennas of public and private services onto the proposed facility;			
21.n.	A description of the technical alternatives and a statement containing justification for the proposed facility;			
21.o.	A description of rejected sites with a U.S.G.S. topographic quadrangle map (scale 1 inch = 2,000 feet) marked to show the location of rejected sites;			
21.p.	A detailed description and justification for the site selected, including a description of siting criteria and the process by which other possible sites were considered and eliminated including but not limited to, environmental effects, cost differential, coverages lost or gained, potential interference with other facilities, and signal loss due to topographical features compared to the proposed prime and alternate sites;			
21.q.	A statement describing hazards to human health, if any, with supporting data and references to regulatory standards;			
21.r.	A statement of the estimated costs for site acquisition and construction of a facility at the prime and alternative sites;			

40.5 - COMMUNICATION STRUCTURES, BUILDINGS AND APPURTENANCES - Applicant

Address: 344 Route 6 **Applicant Name:** Katie Adams c/o Crown Castle **Date:** 7/15/2022.

No.	Requirement	Included	Not Included	Explanation, if needed
21.s.	A schedule showing the proposed program of site acquisition, construction, completion, operation and relocation or removal of the existing facilities for the prime and alternative sits;			
21.t.	A copy of any filing or application that the applicant has been required to make together with any decision with regard to such filing or application;			
21.u.	A landscape plan showing the proposed site and location before and after development, including topography screening proposed to protect abutters;			
21.v.	Plans which show location and siting at a prime and at an alternate site; and			
21.w.	A technical report which demonstrates that the maximum height of the installation is the minimum feasible to provide the intended service.			
22	All written information submitted in accordance with the requirements listed in any previous section of this bylaw shall be certified by an appropriate licensed professional.			
23	The Planning Board may also refer applications to the Board of Health, the Zoning Board of Appeals, and the Conservation Commission for review.			
24	The Planning Board shall not approve any application that does not comply with all the requirements of this bylaw. The Board does, however, have the right to waive any part of this bylaw, when in its opinion, such a waiver would not be detrimental to the public interest, cause the Town any expense, or be inconsistent with the intent and purpose of this bylaw.			
25	Any permit issued by the Planning Board for a communications facility shall be valid for the applicant only; it may not be reassigned, leased or sold.			
26	Municipal and private, non-commercial uses are exempted from this bylaw.			
27	The Planning Board shall act in accordance with the standards and requirements set forth herein and in accordance with the Massachusetts General Laws.			
28	The invalidity of any section of this bylaw shall not invalidate any other section.			

TOWN OF TRURO

Assessors Office
Certified Abutters List
Request Form

RECEIVED
JUL 14 2022
ASSESSOR'S OFFICE
TOWN OF TRURO

DATE: 7/14/2022

NAME OF APPLICANT: DISH Wireless

NAME OF AGENT (if any): Katie Adams, on behalf of Crown Castle

MAILING ADDRESS: 100 Apollo Drive Suite 303 Chelmsford MA 01824

CONTACT: HOME/CELL 781-392-7547 **EMAIL** kadams@nbcllc.com

PROPERTY LOCATION: 344 Route 6
(street address)

PROPERTY IDENTIFICATION NUMBER: MAP 39 **PARCEL** 172 **EXT.** A
(*if condominium*)

ABUTTERS LIST NEEDED FOR: **FEE: $15.00 per checked item**
(*please check **all** applicable*) (*Fee must accompany the application unless other arrangements are made*)

___ Board of Health[5]
___ Cape Cod Commission
___ Conservation Commission[4]
___ Licensing
Type: _____

Planning Board (PB)
X Special Permit[1]
___ Site Plan[2]
___ Preliminary Subdivision[3]
___ Definitive Subdivision[3]
___ Accessory Dwelling Unit (ADU)[2]

Zoning Board of Appeals (ZBA)
___ Special Permit[1]
___ Variance[1]

___ Other _____ *(Fee: Inquire with Assessors)*
(*Please Specify*)

***Note**: Per M.G.L., processing may take up to 10 calendar days. Please plan accordingly.*

THIS SECTION FOR ASSESSORS OFFICE USE ONLY

Date request received by Assessors: 7/14/2022 Date completed: 7/14/2022
List completed by: [signature] Date paid: 7/14/2022 ~~Cash/Check~~ online CC

---

[1]Abutters, owners of land directly opposite on any public or private street or way, and abutters to the abutters within 300 feet of the property line.

[2]Abutters to the subject property, abutters to the abutters, and owners of properties across the street from the subject property.

[3]Landowners immediately bordering the proposed subdivision, landowners immediately bordering the immediate abutters, and landowners located across the streets and ways bordering the proposed subdivision. Note: For Definitive Subdivision only, responsibility of applicant to notify abutters and produce evidence as required.

[4]All abutters within 300 feet of parcel, except Beach Point between Knowles Heights Road and Provincetown border, in which case it is all abutters within 100 feet. Note: Responsibility of applicant to notify abutters and produce evidence as required.

[5]Abutters sharing any boundary or corner in any direction – including land across a street, river or stream. Note: Responsibility of applicant to notify abutters and produce evidence as required.

Revised December 2019

TRURO ASSESSORS OFFICE
PO Box 2012 Truro, MA 02666
Telephone: (508) 214-0921
Fax: (508) 349-5506

Date: July 14, 2022

To: Katie Adams on behalf of Crown Castle, Agent for DISH Wireless

From: Assessors Department

Certified Abutters List: 344 Route 6 (Map 39, Parcel 172)

Planning Board/Special Permit

Attached is a combined list of abutters for the property located at 344Route 6.

The current owner is Town of Truro.

The names and addresses of the abutters are as of July 8, 2022 according to the most recent documents received from the Barnstable County Registry of Deeds.

Certified by: _____

Olga Farrell
Assessing Clerk

344 Route 6
Map 39, Parcel 172
PB/Special Permit

TOWN OF TRURO, MA
BOARD OF ASSESSORS
P.O. BOX 2012, TRURO MA 02666

Abutters List Within 300 feet of Parcel 39/172/A

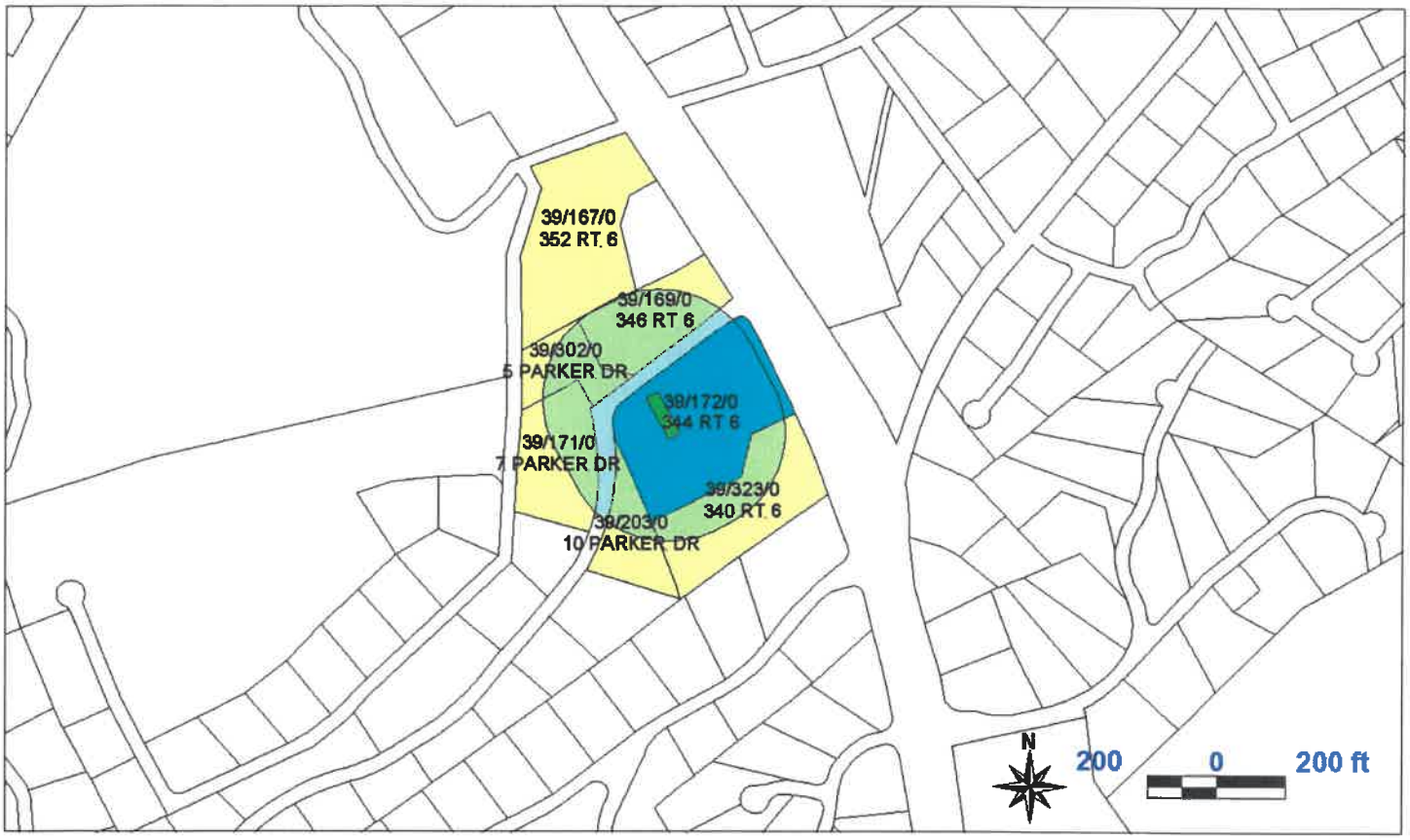

Key	Parcel ID	Owner	Location	Mailing Street	Mailing City	ST	ZipCd/Country
1291	39-167-0-R	TRI-S PROPERTIES LLC	352 RT 6	PO BOX 1081	TRURO	MA	02666-1081
1293	39-169-0-R	SEAMENS BANK	346 RT 6	PO BOX 74	NO TRURO	MA	02652
1294	39-171-0-R	WESTVIEW COURT REALTY TRUST C/O TRIBUNA JR MICHAEL A	7 PARKER DR	192 MILTON ST	QUINCY	MA	02170
1295	39-172-0-E	TOWN OF TRURO	344 RT 6	PO BOX 2030	TRURO	MA	02666-2030
1296	39-172-A-R	SOUTHWESTERN BELL MOBILE SYSTE D/B/A CINGULAR WRLS-AT&T SVCS	344 RT 6	ATTN: TOWER PROPERTY TAX TEAM 754 PEACHTREE ST, 16TH FLR	ATLANTA	GA	30308
1324	39-203-0-R	COHEN JENNIFER S	10 PARKER DR	110 W 96TH ST #11A	NEW YORK	NY	10025
1421	39-302-0-R	PRIDEAUX-BRUNE DIANA & MAHONEY ANNE	5 PARKER DR	10 MUSEUM WAY, UNIT 1929	CAMBRIDGE	MA	02141
6429	39-323-0-E	TOWN OF TRURO	340 RT 6	PO BOX 2030	TRURO	MA	02666-2030

7/14/2022

39-167-0-R

TRI-S PROPERTIES LLC
PO BOX 1081
TRURO, MA 02666-1081

39-169-0-R

SEAMENS BANK
PO BOX 74
NO TRURO, MA 02652

39-171-0-R

WESTVIEW COURT REALTY TRUST
C/O TRIBUNA JR MICHAEL A
192 MILTON ST
QUINCY, MA 02170

39-172-0-E

TOWN OF TRURO
PO BOX 2030
TRURO, MA 02666-2030

39-172-A-R

SOUTHWESTERN BELL MOBILE SYSTE
D/B/A CINGULAR WRLS-AT&T SVCS
ATTN: TOWER PROPERTY TAX TEAM
754 PEACHTREE ST, 16TH FLR
ATLANTA, GA 30308

39-203-0-R

COHEN JENNIFER S
110 W 96TH ST #11A
NEW YORK, NY 10025

39-302-0-R

PRIDEAUX-BRUNE DIANA &
MAHONEY ANNE
10 MUSEUM WAY, UNIT 1929
CAMBRIDGE, MA 02141

39-323-0-E

TOWN OF TRURO
PO BOX 2030
TRURO, MA 02666-2030

Date: **7/17/2021**

Crown Castle
2000 Corporate Drive
Canonsburg, PA 15317
(724) 416-2000

Subject:	**Structural Evaluation**	
Carrier Designation:	***DISH Network* Co-Locate**	
	Site Number:	BOBOS00592A
	Site Name:	MA-CCI-T-841273
Crown Castle Designation:	**BU Number:**	841273
	Site Name:	TRURO
	JDE Job Number:	644620
	WO Number:	1968406
	Order Number:	552716 Rev. 0
Site Data:	**344 Route 6, North Truro, Barnstable County, MA** **Latitude: 42° 1' 18" Longitude: -70° 4' 30"** **170 Foot – Self Support Tower**	

Crown Castle is pleased to submit this **"Structural Evaluation"** to determine the structural integrity of the above-mentioned tower. The purpose of this evaluation is to determine the suitability of the tower structure to support the proposed equipment configuration listed in Table 1.

Based on a comparison of loading listed in the previous analysis dated 3/27/2019, the proposed loading change will not have a significant impact on the overall tower stress rating. Therefore, the final proposed equipment configuration listed in Table 1 is structurally **ACCEPTABLE**.

Table 1: Proposed Equipment Configuration

Mounting Level (ft)	Center Line Elevation (ft)	Number of Antennas	Antenna Manufacturer	Antenna Model	Number of Feed Lines	Feed Line Size (in)
122	122	1	RAYCAP	RDIDC-9181-PF-48	1	1-1/2
		3	FUJITSU	TA08025-B604		
		3	FUJITSU	TA08025-B605		
		3	JMA WIRELESS	MX08FRO665-21		
		3	MOUNTS	Commscope MTC3975083		

Respectfully submitted by:

Digitally signed by Bradley E Byrom
Date: 2021.07.17 10:29:52 -04'00'

COMMONWEALTH OF MASSACHUSETTS
BRADLEY E. BYROM
STRUCTURAL
No. 51881
REGISTERED PROFESSIONAL ENGINEER

Bradley E. Byrom, P.E., S.E.
Senior Project Engineer

Nationwide Programmatic Agreement
Co-location Criteria Verification Form

Site Name: TRURO
Business Unit Number: 841273 App ID: 552716
Site Address: 344 ROUTE 6 NORTH TRURO, MA 02652
Carrier Name: DISH Wireless L.L.C.
Customer Site ID: BOBOS00592A

Tower was built on or before 3/16/01? YES ☑ NO ☐

Criteria for Programmatic Agreement Eligibility for Towers Built on or before March 16, 2001

YES ☐	NO ☑	The mounting of the antenna will result in a substantial increase in the size of the tower[1].
YES ☐	NO ☑	The tower has been found by the FCC to have an adverse or potentially adverse effect that has not been resolved through an MOA or other mechanism.
YES ☐	NO ☑	The tower is the subject of a pending environmental review or proceeding before the FCC involving compliance with Section 106 of the NHPA.
YES ☐	NO ☑	The tower owner has received written or electronic notice from the FCC that the FCC is in receipt of a complaint from a member of the public, a SHPO or the Council that the co-location has an adverse effect on one or more historic properties.

Criteria for Programmatic Agreement Eligibility for Towers Built after March 16, 2001

YES ☐	NO ☐	No Section 106 review (SHPO review) or any associated environmental (NEPA) review required by the FCC has been completed for this tower.
YES ☐	NO ☐	The mounting of the antenna will result in a substantial increase in the size of the tower.[1]
YES ☐	NO ☐	The tower is the subject of a pending environmental review or proceeding before the FCC involving compliance with Section 106 of the NHPA.
YES ☐	NO ☐	The tower owner has received written or electronic notice from the FCC that the FCC is in receipt of a complaint from a member of the public, a SHPO or the Council that the co-location has an adverse effect on one or more historic properties.

If any of the above answers are "YES," consultation with the SHPO is required prior to placement of the antenna on the tower.

Approved By: *Christopher Page* 11/11/2021

A COPY OF THIS COMPLETED FORM MUST BE PROVIDED TO THE CARRIER AND TO THE CROWN CASTLE REGULATORY DEPARTMENT.

[1] Substantial increase in size of the tower" means: 1) an increase in the tower height of more than 10% or by the height of one antenna array with a separation distance from the nearest existing array not to exceed 20 feet, whichever is greater; 2) the installation of more than 4 new equipment cabinets or more than 1 new equipment building; 3) the addition of an appurtenance that would protrude from the edge of the tower more than 20 feet or more than the width of the tower at the level of the appurtenance, whichever is greater; or 4) the mounting of the antenna would involve excavation more than 30' in any direction outside the current boundaries of the site and any access or utility easements currently related to the site.

DISH Wireless L.L.C. SITE ID:

BOBOS00592A

DISH Wireless L.L.C. SITE ADDRESS:

344 ROUTE 6
NORTH TRURO, MA 02652

MASSACHUSETTS CODE OF COMPLIANCE

ALL WORK SHALL BE PERFORMED AND MATERIALS INSTALLED IN ACCORDANCE WITH THE CURRENT EDITIONS OF THE FOLLOWING CODES AS ADOPTED BY THE LOCAL GOVERNING AUTHORITIES. NOTHING IN THESE PLANS IS TO BE CONSTRUED TO PERMIT WORK NOT CONFORMING TO THESE CODES

CODE TYPE	CODE
BUILDING	MA STATE BUILDING CODE, 9TH EDITION (780 CMR)/2015 IBC W/ AMENDMENTS
MECHANICAL	MA STATE BUILDING CODE, 9TH EDITION (780 CMR)/2015 IMC W/ AMENDMENTS
ELECTRICAL	MA ELECTRICAL CODE/2020 NEC W/ AMENDMENTS

SHEET INDEX

SHEET NO.	SHEET TITLE
T-1	TITLE SHEET
A-1	OVERALL AND ENLARGED SITE PLANS
A-2	ELEVATION, ANTENNA LAYOUT AND SCHEDULE
A-3	EQUIPMENT PLATFORM AND H-FRAME DETAILS
A-4	EQUIPMENT DETAILS
A-5	EQUIPMENT DETAILS
A-6	EQUIPMENT DETAILS
E-1	ELECTRICAL/FIBER ROUTE PLAN AND NOTES
E-2	ELECTRICAL DETAILS
E-3	ELECTRICAL ONE-LINE, FAULT CALCS & PANEL SCHEDULE
G-1	GROUNDING PLANS AND NOTES
G-2	GROUNDING DETAILS
G-3	GROUNDING DETAILS
RF-1	RF CABLE COLOR CODE
GN-1	LEGEND AND ABBREVIATIONS
GN-2	GENERAL NOTES
GN-3	GENERAL NOTES
GN-4	GENERAL NOTES

SCOPE OF WORK

THIS IS NOT AN ALL INCLUSIVE LIST. CONTRACTOR SHALL UTILIZE SPECIFIED EQUIPMENT PART OR ENGINEER APPROVED EQUIVALENT. CONTRACTOR SHALL VERIFY ALL NEEDED EQUIPMENT TO PROVIDE A FUNCTIONAL SITE. THE PROJECT GENERALLY CONSISTS OF THE FOLLOWING:

TOWER SCOPE OF WORK:
- INSTALL (3) PROPOSED PANEL ANTENNAS (1 PER SECTOR)
- INSTALL (3) PROPOSED SECTOR FRAMES
- INSTALL PROPOSED JUMPERS
- INSTALL (6) PROPOSED RRUs (2 PER SECTOR)
- INSTALL (1) PROPOSED OVER VOLTAGE PROTECTION DEVICE (OVP)
- INSTALL (1) PROPOSED HYBRID CABLE

GROUND SCOPE OF WORK:
- INSTALL (1) PROPOSED METAL PLATFORM
- INSTALL (1) PROPOSED ICE BRIDGE
- INSTALL (1) PROPOSED PPC CABINET
- INSTALL (1) PROPOSED EQUIPMENT CABINET
- INSTALL (1) PROPOSED POWER CONDUIT
- INSTALL (1) PROPOSED TELCO CONDUIT
- INSTALL (1) PROPOSED TELCO-FIBER BOX
- INSTALL (1) PROPOSED GPS UNIT
- INSTALL (1) PROPOSED SAFETY SWITCH (IF REQUIRED)
- INSTALL (1) PROPOSED FIBER NID (IF REQUIRED)
- INSTALL (1) PROPOSED NEW 200A METER IN EXISTING SOCKET

SITE PHOTO

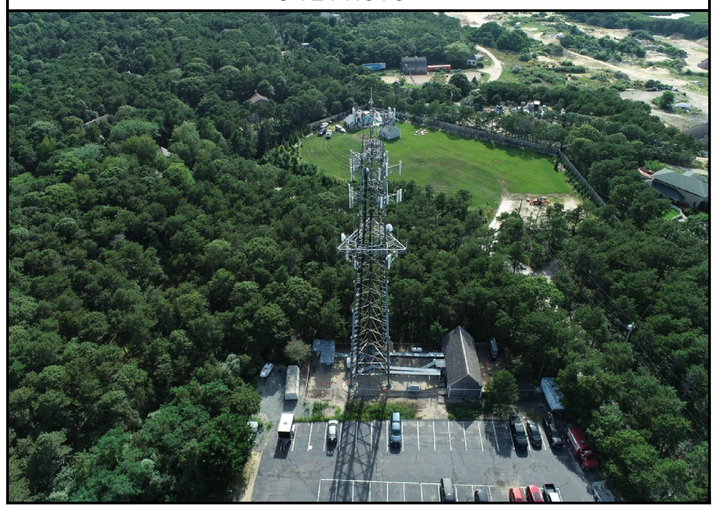

UNDERGROUND SERVICE ALERT - 811 DIG SAFE
UTILITY NOTIFICATION CENTER OF MASSACHUSETTS
(888) 344-7233
WWW.DIGSAFE.COM

CALL 3 WORKING DAYS UTILITY NOTIFICATION PRIOR TO CONSTRUCTION

811

GENERAL NOTES

THE FACILITY IS UNMANNED AND NOT FOR HUMAN HABITATION. A TECHNICIAN WILL VISIT THE SITE AS REQUIRED FOR ROUTINE MAINTENANCE. THE PROJECT WILL NOT RESULT IN ANY SIGNIFICANT DISTURBANCE OR EFFECT ON DRAINAGE. NO SANITARY SEWER SERVICE, POTABLE WATER, OR TRASH DISPOSAL IS REQUIRED AND NO COMMERCIAL SIGNAGE IS PROPOSED.

11"x17" PLOT WILL BE HALF SCALE UNLESS OTHERWISE NOTED

CONTRACTOR SHALL VERIFY ALL PLANS, EXISTING DIMENSIONS, AND CONDITIONS ON THE JOB SITE, AND SHALL IMMEDIATELY NOTIFY THE ENGINEER IN WRITING OF ANY DISCREPANCIES BEFORE PROCEEDING WITH THE WORK.

SITE INFORMATION

PROPERTY OWNER:	TOWN OF TRURO, MA
PROPERTY OWNER ADDRESS:	24 TOWN HALL ROAD TRURO, MA 02666
TOWER TYPE:	SELF SUPPORT
TOWER CO SITE ID:	841273
TOWER APP NUMBER:	552716
COUNTY:	BARNSTABLE
LATITUDE (NAD 83):	42° 1' 18.00" N 42.02166667
LONGITUDE (NAD 83):	70° 4' 30.00 W -70.07500000
ZONING JURISDICTION:	TOWN OF TRURO, MA
ZONING DISTRICT:	R (RESIDENTIAL)
PARCEL NUMBER:	039-000-172-00
OCCUPANCY GROUP:	U
CONSTRUCTION TYPE:	II-B
POWER COMPANY:	EVERSOURCE
TELEPHONE COMPANY:	CROWN CASTLE

PROJECT DIRECTORY

APPLICANT:	DISH Wireless L.L.C. 5701 SOUTH SANTA FE DRIVE LITTLETON, CO 80120
TOWER OWNER:	CROWN CASTLE 2000 CORPORATE DRIVE CANONSBURG, PA 15317 (877) 486-9377
SITE DESIGNER:	HUDSON DESIGN GROUP, LLC. 45 BEECHWOOD DRIVE NORTH ANDOVER, MA 01845 (978) 557-5553
SITE ACQUISITION:	COURTNEY PRESTON courtney.preston.contractor@crowncastle.com
CONSTRUCTION MANAGER:	TIMOTHY HARDY timothy.hardy@dish.com
RF ENGINEER:	NAGESH NAYAK nagesh.nayak@dish.com

DIRECTIONS

DIRECTIONS FROM BOSTON LOGAN INTERNATIONAL AIRPORT:

START OUT GOING EAST ON RACE POINT RD. TURN RIGHT TO STAY ON RACE POINT RD. TURN LEFT ONTO ROUTE 6/US-6 W. CONTINUE TO FOLLOW US-6 W. 344 ROUTE 6, NORTH TRURO, MA 02652, 344 ROUTE 6 IS ON THE RIGHT.

VICINITY MAP

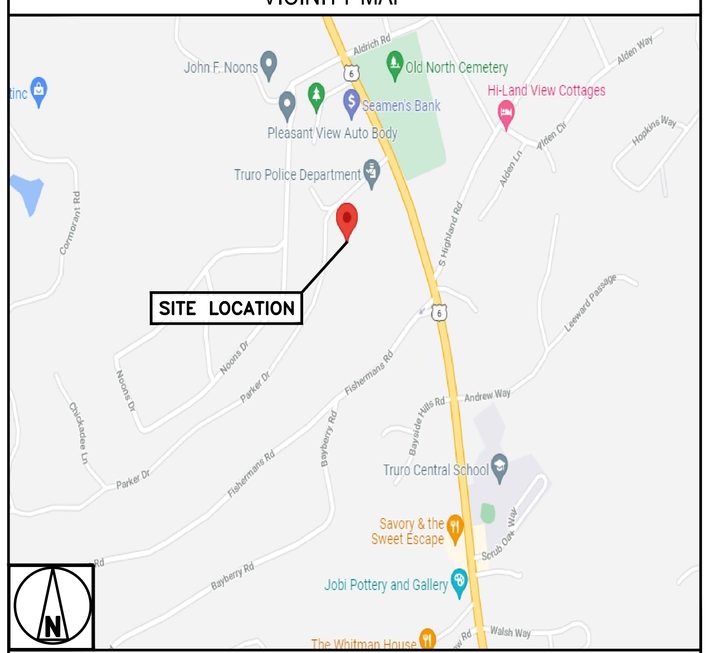

NO SCALE

dish wireless.

5701 SOUTH SANTA FE DRIVE
LITTLETON, CO 80120

HDG HUDSON Design Group LLC

45 BEECHWOOD DRIVE
N. ANDOVER, MA 01845

TEL: (978) 557-5553
FAX: (978) 336-5586

COMMONWEALTH OF MASSACHUSETTS
DANIEL P. HAMM
CIVIL
No. 40720
REGISTERED PROFESSIONAL ENGINEER

IT IS A VIOLATION OF LAW FOR ANY PERSON, UNLESS THEY ARE ACTING UNDER THE DIRECTION OF A LICENSED PROFESSIONAL ENGINEER, TO ALTER THIS DOCUMENT.

DRAWN BY:	CHECKED BY:	APPROVED BY:
PS	SMA	DPH

RFDS REV #: 0

PRELIMINARY DOCUMENTS

SUBMITTALS

REV	DATE	DESCRIPTION
A	11/15/2021	ISSUED FOR REVIEW
B	01/21/2022	ISSUED FOR REVIEW

A&E PROJECT NUMBER
BOBOS00592A

DISH Wireless L.L.C.
PROJECT INFORMATION
BOBOS00592A
CROWN CASTLE BU#841273
344 ROUTE 6
NORTH TRURO, MA 02652

SHEET TITLE
TITLE SHEET

SHEET NUMBER
T-1

NOTES

1. CONTRACTOR SHALL FIELD VERIFY ALL DIMENSIONS.
2. ANTENNAS AND MOUNTS OMITTED FOR CLARITY.

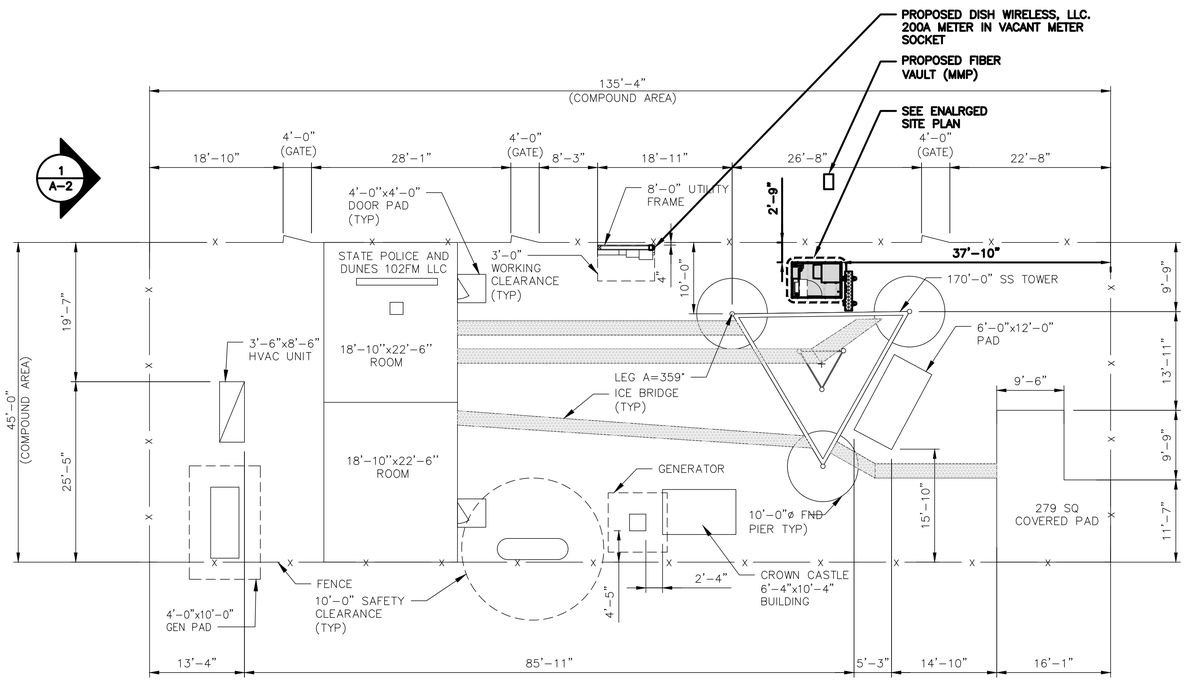

OVERALL SITE PLAN

12' 8' 4' 0 10' 20'
3/32"=1'-0"

1

NOTES

1. CONTRACTOR SHALL FIELD VERIFY ALL DIMENSIONS.
2. CONTRACTOR SHALL MAINTAIN A 10'-0" MINIMUM SEPARATION BETWEEN THE PROPOSED GPS UNIT, TRANSMITTING ANTENNAS AND EXISTING GPS UNITS.
3. ANTENNAS AND MOUNTS OMITTED FOR CLARITY.

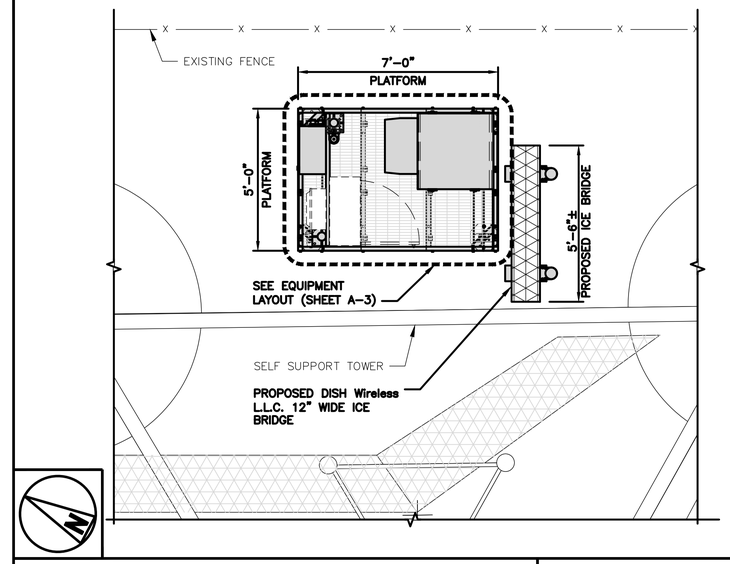

ENLARGED SITE PLAN

12" 6" 0 1' 2' 3' 4' 5' 6' 7'
3/8"=1'-0"

2

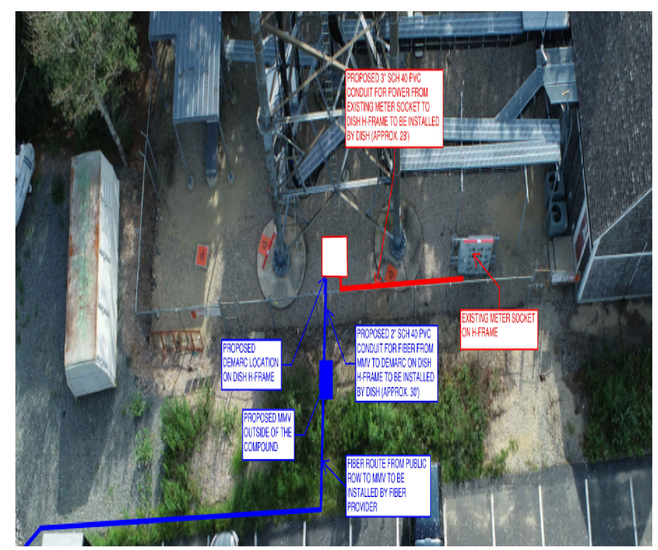

OVERALL UTILITY ROUTE PLAN

NO SCALE

3

dish wireless.
5701 SOUTH SANTA FE DRIVE
LITTLETON, CO 80120

HDG HUDSON Design Group LLC
45 BEECHWOOD DRIVE
N. ANDOVER, MA 01845
TEL: (978) 557-5553
FAX: (978) 336-5586

COMMONWEALTH OF MASSACHUSETTS
DANIEL P. HAMM
CIVIL
No. 40720
REGISTERED PROFESSIONAL ENGINEER

IT IS A VIOLATION OF LAW FOR ANY PERSON, UNLESS THEY ARE ACTING UNDER THE DIRECTION OF A LICENSED PROFESSIONAL ENGINEER, TO ALTER THIS DOCUMENT.

DRAWN BY:	CHECKED BY:	APPROVED BY:
PS	SMA	DPH

RFDS REV #: 0

PRELIMINARY DOCUMENTS

SUBMITTALS

REV	DATE	DESCRIPTION
A	11/15/2021	ISSUED FOR REVIEW
B	01/21/2022	ISSUED FOR REVIEW

A&E PROJECT NUMBER
BOBOS00592A

DISH Wireless L.L.C.
PROJECT INFORMATION
BOBOS00592A
CROWN CASTLE BU#841273
344 ROUTE 6
NORTH TRURO, MA 02652

SHEET TITLE
OVERALL AND ENLARGED SITE PLANS

SHEET NUMBER
A-1

NOTES

1. CONTRACTOR SHALL FIELD VERIFY ALL DIMENSIONS.
2. ANTENNA AND MW DISH SPECIFICATIONS REFER TO ANTENNA SCHEDULE AND TO FINAL CONSTRUCTION RFDS FOR ALL RF DETAILS
3. EXISTING EQUIPMENT AND FENCE OMITTED FOR CLARITY.

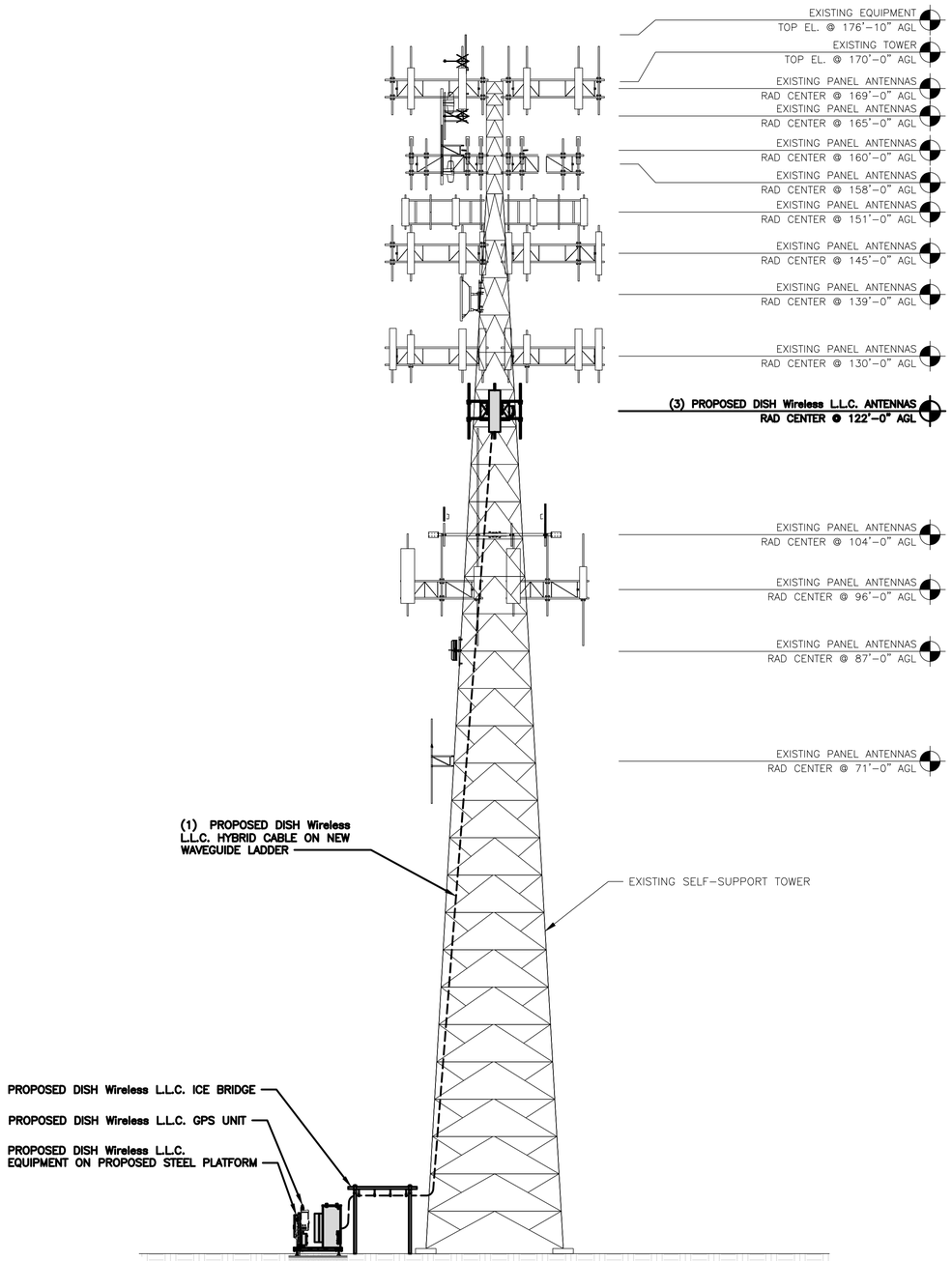

PROPOSED ELEVATION

12' 8' 4' 0 10' 20'
3/32"=1'-0"

1

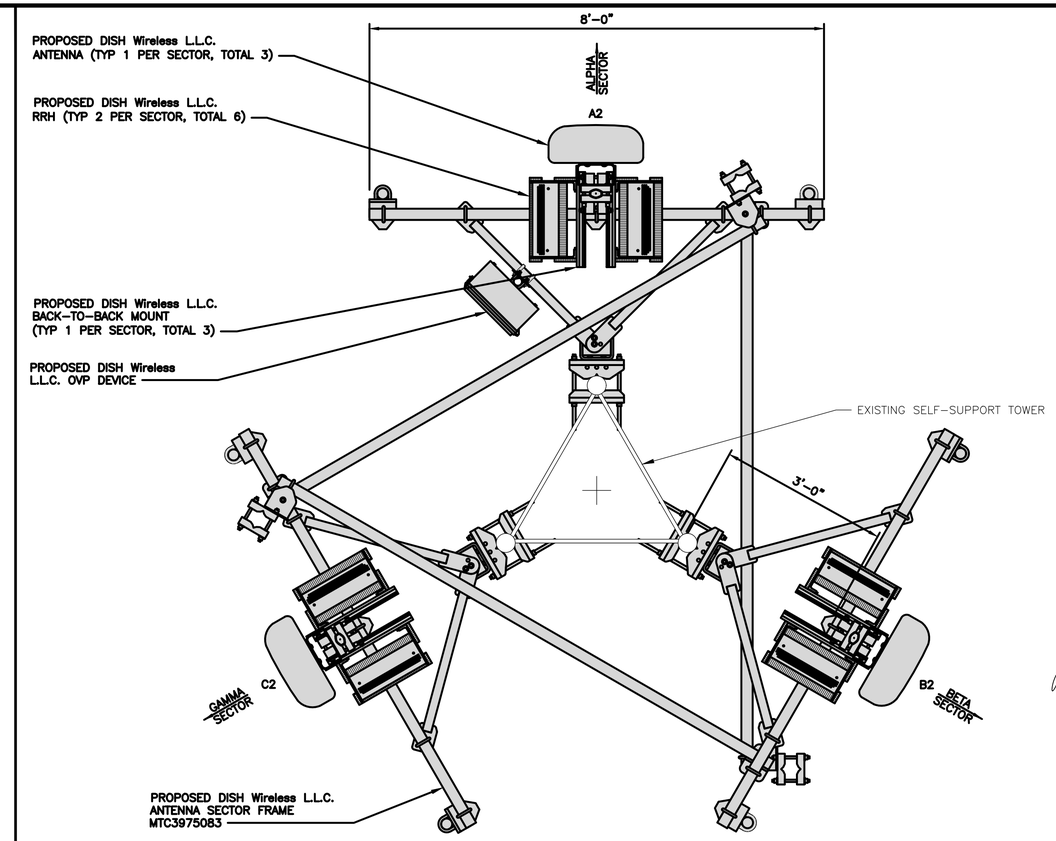

ANTENNA LAYOUT

12" 6" 0 1' 2' 3'
3/4"=1'-0"

2

SECTOR POS.	ANTENNA					TRANSMISSION CABLE	RRH			OVP
	EXISTING OR PROPOSED	MANUFACTURER – MODEL NUMBER	TECH	AZIMUTH	RAD CENTER	FEED LINE TYPE AND LENGTH	MANUFACTURER – MODEL NUMBER	TECH	POS.	MANUFACTURER MODEL
A1	--	--	--	--	--	(1) HIGH-CAPACITY HYBRID CABLE (155' LONG)	FUJITSU / TA08025-B604	5G	A2	RAYCAP / RDIDC-9181-PF-48
A2	PROPOSED	COMMSCOPE-FFVV-65B-R2	5G	330°	122'-0"		FUJITSU / TA08025-B605	5G	A2	
A3	--	--	--	--	--		--	--	--	
B1	--	--	--	--	--	SHARED W/ALPHA	FUJITSU / TA08025-B604	5G	B2	SHARED W/ALPHA
B2	PROPOSED	COMMSCOPE-FFVV-65B-R2	5G	80°	122'-0"		FUJITSU / TA08025-B605	5G	B2	
B3	--	--	--	--	--		--	--	--	
C1	--	--	--	--	--	SHARED W/ALPHA	FUJITSU / TA08025-B604	5G	C2	SHARED W/ALPHA
C2	PROPOSED	COMMSCOPE-FFVV-65B-R2	5G	180°	122'-0"		FUJITSU / TA08025-B605	5G	C2	
C3	--	--	--	--	--		--	--	--	

NOTES

1. CONTRACTOR TO REFER TO FINAL CONSTRUCTION RFDS FOR ALL RF DETAILS.
2. ANTENNA AND RRH MODELS MAY CHANGE DUE TO EQUIPMENT AVAILABILITY. ALL EQUIPMENT CHANGES MUST BE APPROVED AND REMAIN IN COMPLIANCE WITH THE PROPOSED DESIGN AND STRUCTURAL ANALYSES.

ANTENNA SCHEDULE

NO SCALE

3

dish wireless.
5701 SOUTH SANTA FE DRIVE
LITTLETON, CO 80120

HDG HUDSON Design Group LLC
45 BEECHWOOD DRIVE
N. ANDOVER, MA 01845
TEL: (978) 557-5553
FAX: (978) 336-5586

COMMONWEALTH OF MASSACHUSETTS
DANIEL P. HAMM
CIVIL
No. 40720
REGISTERED PROFESSIONAL ENGINEER

IT IS A VIOLATION OF LAW FOR ANY PERSON, UNLESS THEY ARE ACTING UNDER THE DIRECTION OF A LICENSED PROFESSIONAL ENGINEER, TO ALTER THIS DOCUMENT.

DRAWN BY:	CHECKED BY:	APPROVED BY:
PS	SMA	DPH

RFDS REV #: 0

PRELIMINARY DOCUMENTS

SUBMITTALS

REV	DATE	DESCRIPTION
A	11/15/2021	ISSUED FOR REVIEW
B	01/21/2022	ISSUED FOR REVIEW

A&E PROJECT NUMBER
BOBOS00592A

DISH Wireless L.L.C.
PROJECT INFORMATION
BOBOS00592A
CROWN CASTLE BU#841273
344 ROUTE 6
NORTH TRURO, MA 02652

SHEET TITLE
ELEVATION, ANTENNA LAYOUT AND SCHEDULE

SHEET NUMBER
A-2

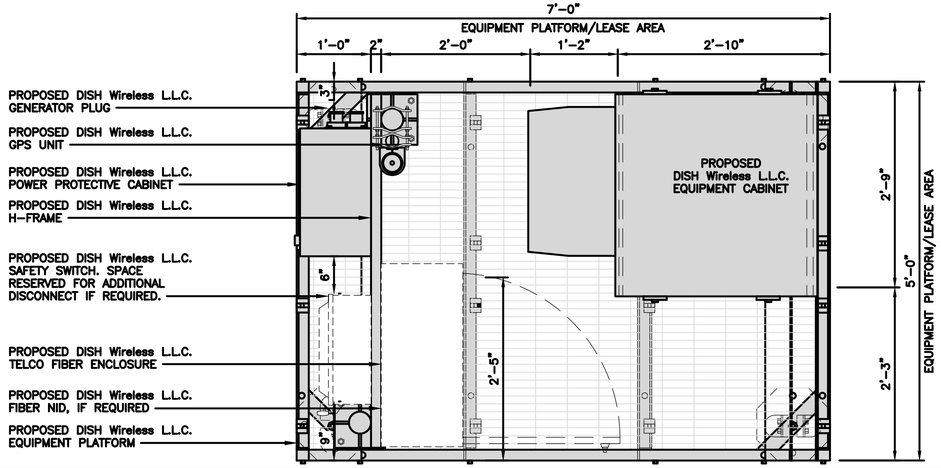

PLATFORM EQUIPMENT PLAN

12" 9" 6" 3" 0 1' 2'
1"=1'-0"

1

COMMSCOPE MTC4045LP 5X7 PLATFORM	
DIMENSIONS (HxWxD)	16"x84"x60"
TOTAL WEIGHT	423 LBS

NOTE:
GC TO PROVIDE EXTENDED THREAD FOR PLATFORM IF REQUIRED HEIGHT EXCEEDS 17"

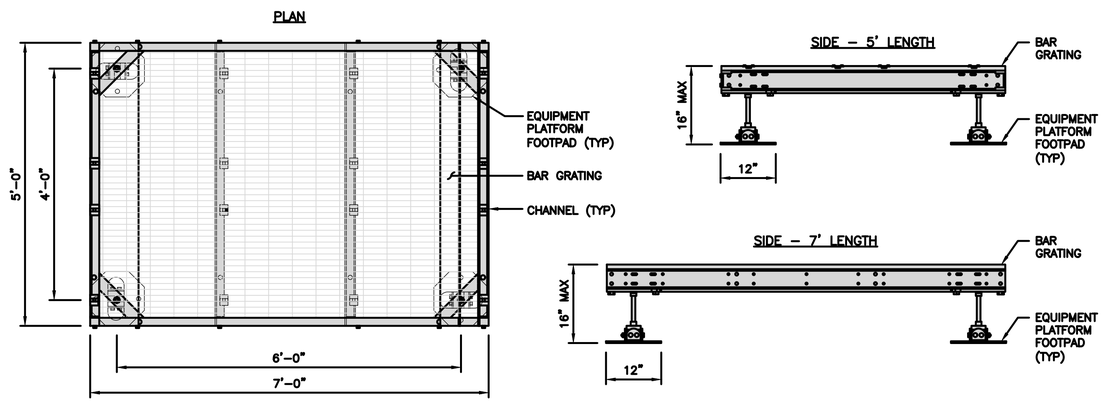

PLATFORM DETAIL

NO SCALE

2

COMMSCOPE MTC4045HFLD H-FRAME	
UNISTRUT/SUPPORT RAILS QTY	5
WEIGHT	59.74 lbs

NOTE:
OR DISH Wireless L.L.C. APPROVED EQUIVALENT

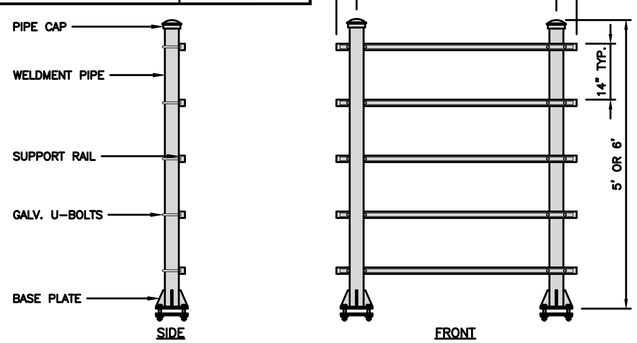

H-FRAME DETAIL

NO SCALE

3

NOT USED

NO SCALE

4

NOTES

1. CONTRACTOR TO BURY PLATFORM FEET WITH A MINIMUM OF 2" OF FILL PER EXISTING SITE SURFACE
2. WEED BARRIER FABRIC TO BE ADDED AT DISCRETION OF DISH Wireless L.L.C. CONSTRUCTION MANAGER AT TIME OF CONSTRUCTION. ONE SHEET 8'x8' INSTALLED UNDER ALL FOUR FEET OF THE PLATFORM (4 MIL BLACK PLASTIC)
3. EQUIPMENT CABINET OMITTED FOR CLARITY

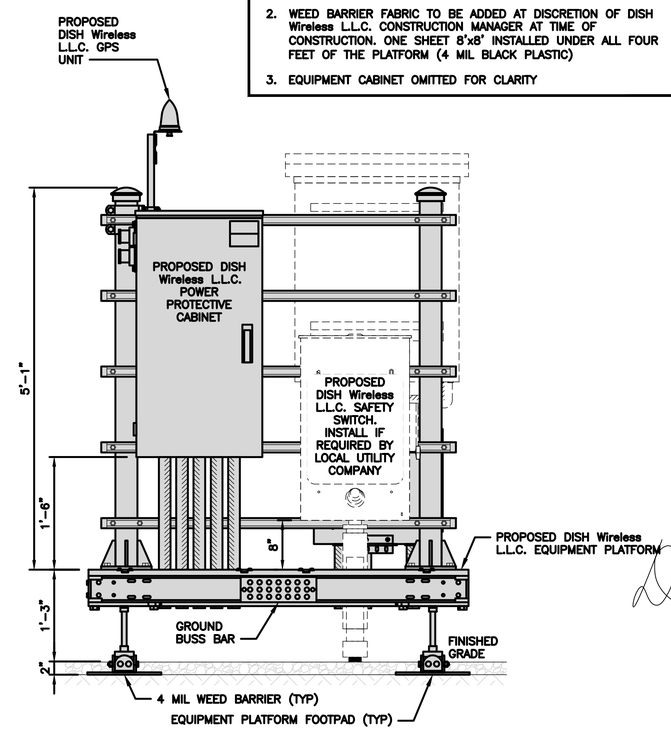

FRONT ELEVATION

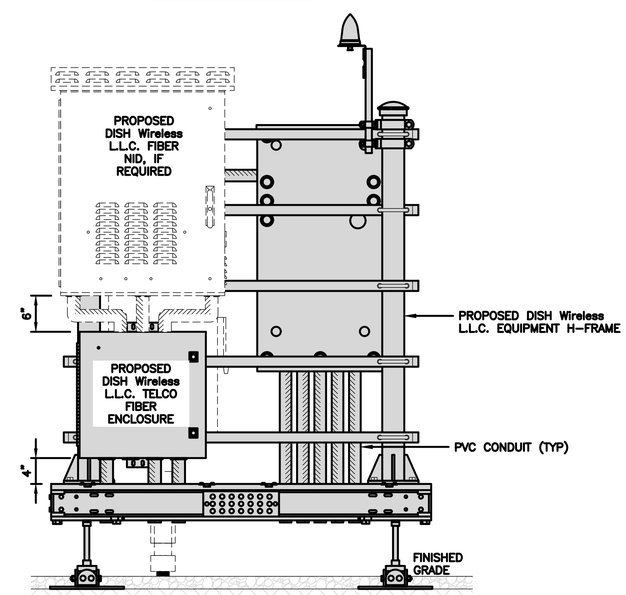

BACK ELEVATION

H-FRAME EQUIPMENT ELEVATION

12" 9" 6" 3" 0 1' 2'
1"=1'-0"

5

dish wireless.

5701 SOUTH SANTA FE DRIVE
LITTLETON, CO 80120

HDG HUDSON Design Group LLC

45 BEECHWOOD DRIVE
N. ANDOVER, MA 01845

TEL: (978) 557-5553
FAX: (978) 336-5586

COMMONWEALTH OF MASSACHUSETTS
DANIEL P. HAMM
CIVIL
No. 40720
REGISTERED PROFESSIONAL ENGINEER

IT IS A VIOLATION OF LAW FOR ANY PERSON, UNLESS THEY ARE ACTING UNDER THE DIRECTION OF A LICENSED PROFESSIONAL ENGINEER, TO ALTER THIS DOCUMENT.

DRAWN BY:	CHECKED BY:	APPROVED BY:
PS	SMA	DPH

RFDS REV #: 0

PRELIMINARY DOCUMENTS

SUBMITTALS

REV	DATE	DESCRIPTION
A	11/15/2021	ISSUED FOR REVIEW
B	01/21/2022	ISSUED FOR REVIEW

A&E PROJECT NUMBER
BOBOS00592A

DISH Wireless L.L.C.
PROJECT INFORMATION
BOBOS00592A
CROWN CASTLE BU#841273
344 ROUTE 6
NORTH TRURO, MA 02652

SHEET TITLE
EQUIPMENT PLATFORM AND H-FRAME DETAILS

SHEET NUMBER
A-3

CHARLES INDUSTRY HEX CUBE-PM639155N4	
DIMENSIONS (HxWxD)	74"x32"x32"
POWER PLANT	-48VDC ABB/600W
TOTAL WEIGHT (EMPTY)	408 lbs

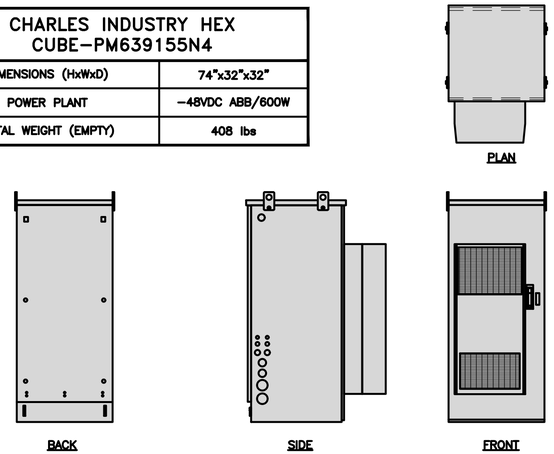

CABINET DETAIL | NO SCALE | 1

RAYCAP PPC RDIAC-2465-P-240-MTS	
ENCLOSURE DIMENSIONS (HxWxD):	39"x22.855"x12.593
WEIGHT:	80 lbs
OPERATING AC VOLTAGE	240/120 1 PHASE 3W+G

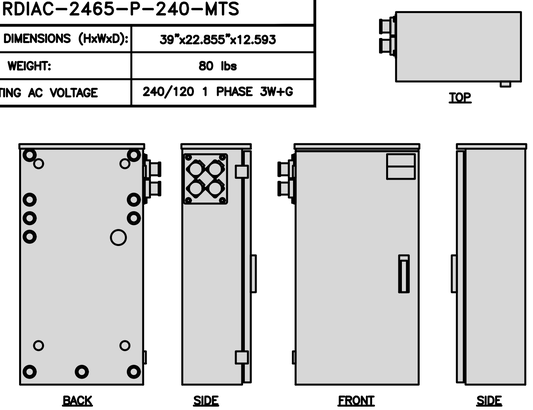

POWER PROTECTION CABINET (PPC) DETAIL | NO SCALE | 2

SQUARE D SAFETY SWITCHES D224NRB	
ENCLOSURE DIM (HxWxD)	29.25"x19.00"x8.50"
ENCLOSURE TYPE	NEMA 3R RAINPROOF
UL LISTED	FILE E-2875

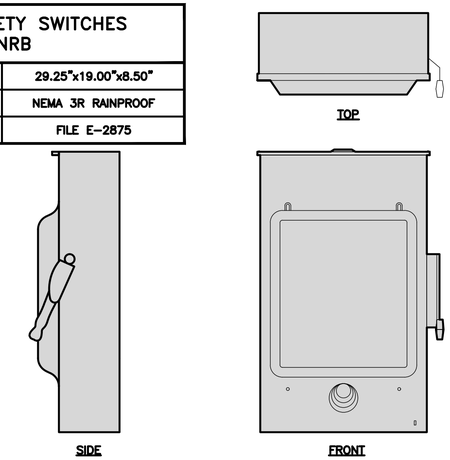

SAFETY SWITCH DETAIL | NO SCALE | 3

NOT USED | NO SCALE | 4

ZAYO 5RU (LEFT SWING DOOR) FIBER NID ENCLOSURE	
DIMENSIONS (HxWxD)	36.1"x29"x12.9"
WEIGHT	85 lbs

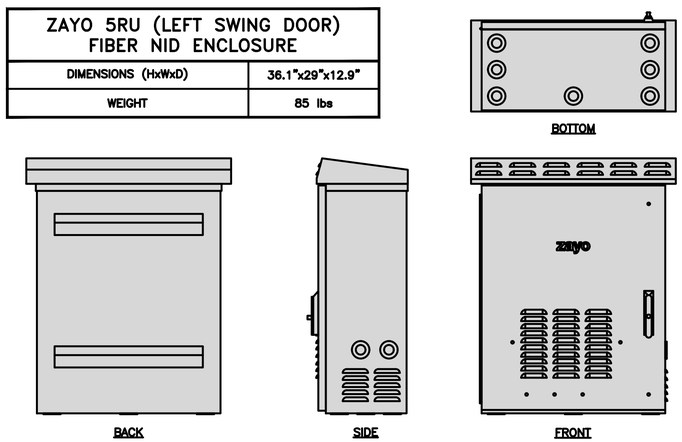

FIBER NID ENCLOSURE DETAIL | NO SCALE | 5

CHARLES CFIT-PF2020DSH1 FIBER TELCO ENCLOSURE	
ENCLOSURE DIMS (HxWxD)	20"x20"x9"
ENCLOSURE WEIGHT	20 lbs
MOUNTING	WALL
COMPLIANCE	TYPE 4

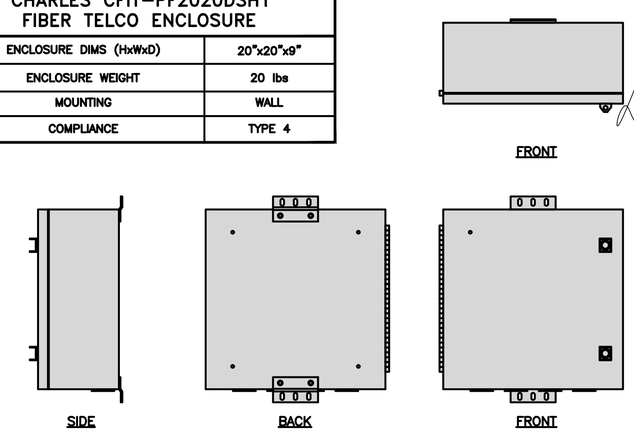

FIBER TELCO ENCLOSURE DETAIL | NO SCALE | 6

COMMSCOPE WB-K110-B WAVEGUIDE BRIDGE KIT	
DIMENSIONS (HxL)	160"x10'
WEIGHT/ VOLUME	325.0 LBS
CABLE RUN (QTY)	12

INCLUDED PRODUCTS:	
	WB-T12-3 TRAPEZE KIT, 3 RUNGS
	WB-LB12-3 SUPPORT BRACKET
	MF-130 DIRECT BURIAL PIPE COLUMN, 13'-4"

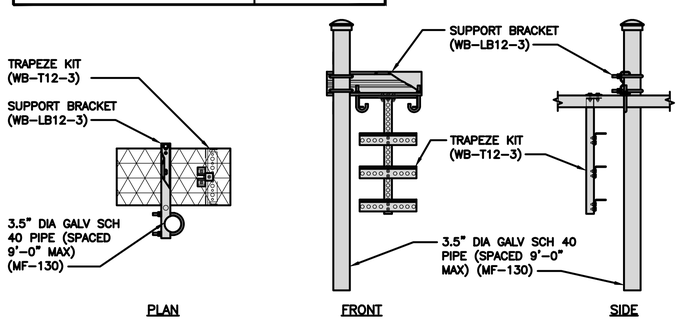

ICE BRIDGE DETAIL | NO SCALE | 7

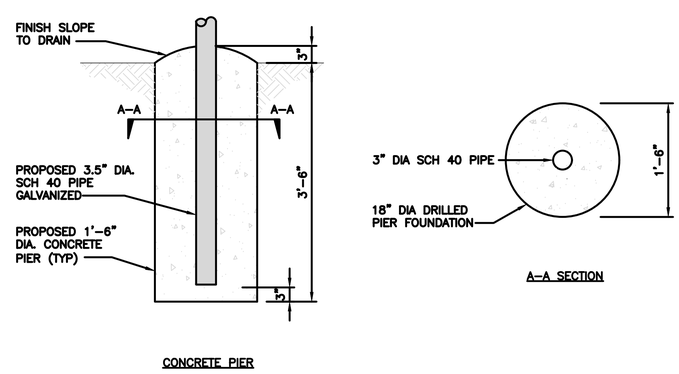

TYPICAL ICE BRIDGE CONCRETE PIER DETAIL | NO SCALE | 8

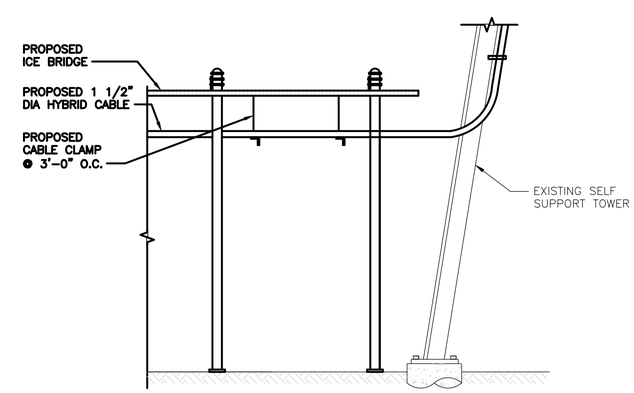

HYBRID CABLE RUN | NO SCALE | 9

dish wireless.
5701 SOUTH SANTA FE DRIVE
LITTLETON, CO 80120

HDG HUDSON Design Group LLC
45 BEECHWOOD DRIVE
N. ANDOVER, MA 01845
TEL: (978) 557-5553
FAX: (978) 336-5586

COMMONWEALTH OF MASSACHUSETTS
DANIEL P. HAMM
CIVIL
No. 40720
REGISTERED PROFESSIONAL ENGINEER

IT IS A VIOLATION OF LAW FOR ANY PERSON, UNLESS THEY ARE ACTING UNDER THE DIRECTION OF A LICENSED PROFESSIONAL ENGINEER, TO ALTER THIS DOCUMENT.

DRAWN BY:	CHECKED BY:	APPROVED BY:
PS	SMA	DPH

RFDS REV #: 0

PRELIMINARY DOCUMENTS

SUBMITTALS

REV	DATE	DESCRIPTION
A	11/15/2021	ISSUED FOR REVIEW
B	01/21/2022	ISSUED FOR REVIEW

A&E PROJECT NUMBER
BOBOS00592A

DISH Wireless L.L.C.
PROJECT INFORMATION
BOBOS00592A
CROWN CASTLE BU#841273
344 ROUTE 6
NORTH TRURO, MA 02652

SHEET TITLE
EQUIPMENT DETAILS

SHEET NUMBER
A-4

PCTEL GPSGL-TMG-SPI-40NCB	
DIMENSIONS (DIAxH) MM/INCH	81x184mm 3.2"x7.25"
WEIGHT W/ACCESSORIES	075 lbs
CONNECTOR	N-FEMALE
FREQUENCY RANGE	1590 ± 30MHz

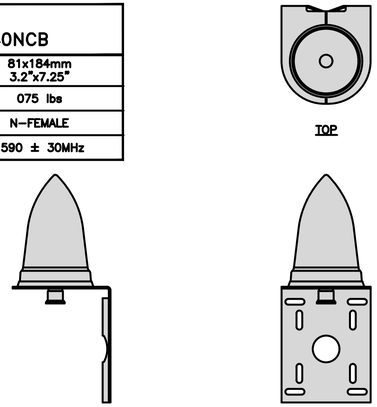

GPS DETAIL | NO SCALE | 1

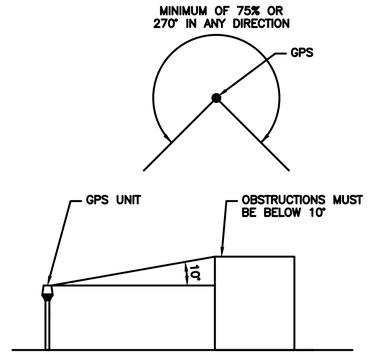

GPS MINIMUM SKY VIEW REQUIREMENTS | NO SCALE | 2

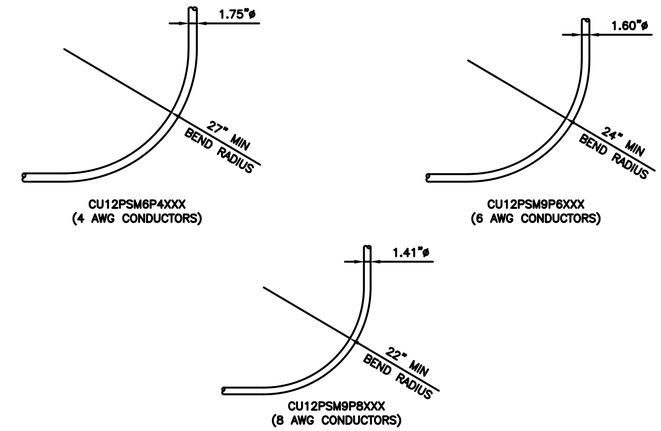

CABLES UNLIMITED HYBRID CABLE MINIMUM BEND RADIUSES | NO SCALE | 3

NOT USED | NO SCALE | 4

NOT USED | NO SCALE | 5

NOT USED | NO SCALE | 6

NOT USED | NO SCALE | 7

NOT USED | NO SCALE | 8

NOT USED | NO SCALE | 9

dish wireless.
5701 SOUTH SANTA FE DRIVE
LITTLETON, CO 80120

HDG HUDSON Design Group LLC
45 BEECHWOOD DRIVE
N. ANDOVER, MA 01845
TEL: (978) 557-5553
FAX: (978) 336-5586

COMMONWEALTH OF MASSACHUSETTS
DANIEL P. HAMM
CIVIL
No. 40720
REGISTERED PROFESSIONAL ENGINEER

IT IS A VIOLATION OF LAW FOR ANY PERSON, UNLESS THEY ARE ACTING UNDER THE DIRECTION OF A LICENSED PROFESSIONAL ENGINEER, TO ALTER THIS DOCUMENT.

DRAWN BY:	CHECKED BY:	APPROVED BY:
PS	SMA	DPH

RFDS REV #: 0

PRELIMINARY DOCUMENTS

SUBMITTALS

REV	DATE	DESCRIPTION
A	11/15/2021	ISSUED FOR REVIEW
B	01/21/2022	ISSUED FOR REVIEW

A&E PROJECT NUMBER
BOBOS00592A

DISH Wireless L.L.C.
PROJECT INFORMATION
BOBOS00592A
CROWN CASTLE BU#841273
344 ROUTE 6
NORTH TRURO, MA 02652

SHEET TITLE
EQUIPMENT DETAILS

SHEET NUMBER
A-5

FUJITSU TRIPLE BAND TA08025-B605	
DIMENSIONS (HxWxD)	14.9"x15.7"x9"
WEIGHT	74.95 lbs
CONNECTOR TYPE	4.3-10 RF CONNECTOR
POWER SUPPLY	DC -58~-36V

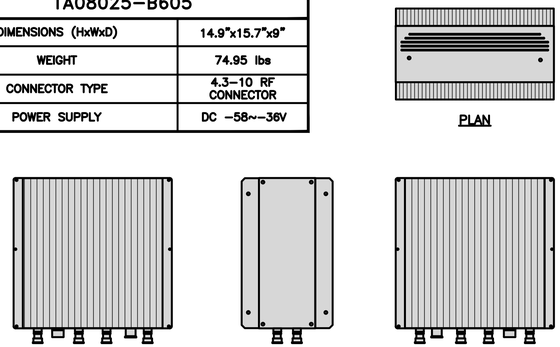

RRH DETAIL | NO SCALE | 1

FUJITSU DUAL BAND TA08025-B604	
DIMENSIONS (HxWxD)	14.9"x15.7"x7.8"
WEIGHT	63.9 lbs
CONNECTOR TYPE	4.3-10 RF CONNECTOR
POWER SUPPLY	DC -58~-36V

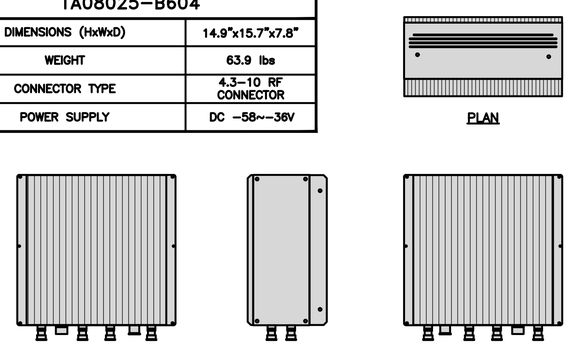

RRH DETAIL | NO SCALE | 2

SABRE DOUBLE Z-BRACKET C10123155	
DIMENSIONS (HxWxD) (1 BRACKET)	5"x20"x1-13/16"
WEIGHT (FULL ASSEMBLY)	35.79 lbs
PACKAGE QUANTITY	4

#	DESCRIPTION
1	PLATE, CHANNEL BRACKET
2	RRH Z BRACKET, 3/16"
3	THREADED ROD ASSEMBLY 1/2"x12"

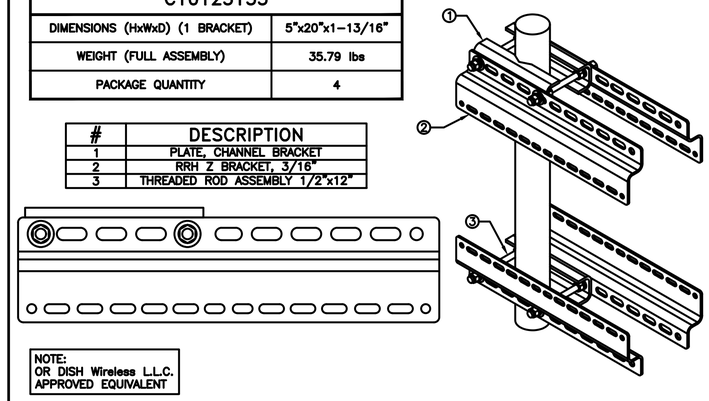

NOTE:
OR DISH Wireless L.L.C.
APPROVED EQUIVALENT

RRH MOUNT DETAIL | NO SCALE | 3

COMMSCOPE FFVV-65B-R2	
DIMENSIONS (HxWxD)(MM/IN)	1828x498x197 72"x19.6"x7.8"
RF CONNECTOR INTERFACE	4.3-10 FEMALE
WEIGHT	70.8 lbs
WEIGHT WITH BRACKETS	98.1 lbs

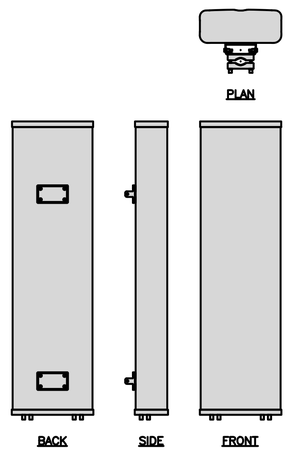

ANTENNA DETAIL | NO SCALE | 4

NOT USED | NO SCALE | 5

JMA ANTENNA MOUNT BRACKET #91900318	
TOTAL WEIGHT (WITH BRACKETS)	18 lbs (8.18 Kg)
POLE DIAMETER RANGE	2.5" TO 4.5"

NOTE:
KIT #91900318: TOP AND BOTTOM BRACKETS FOR 4-,6-, AND 8-FOOT ANTENNAS

ANTENNA BRACKET NOT PART OF KIT

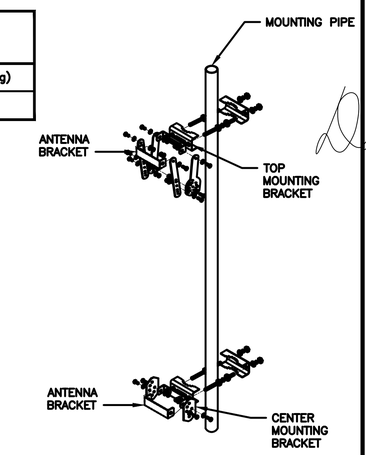

NOTE:
OR DISH Wireless L.L.C.
APPROVED EQUIVALENT

ANTENNA BRACKET DETAIL | NO SCALE | 6

RAYCAP RDIDC-9181-PF-48 DC SURGE PROTECTION (OVP)	
DIMENSIONS (HxWxD)	18.98"x14.39"x8.15"
WEIGHT	21.82 LBS

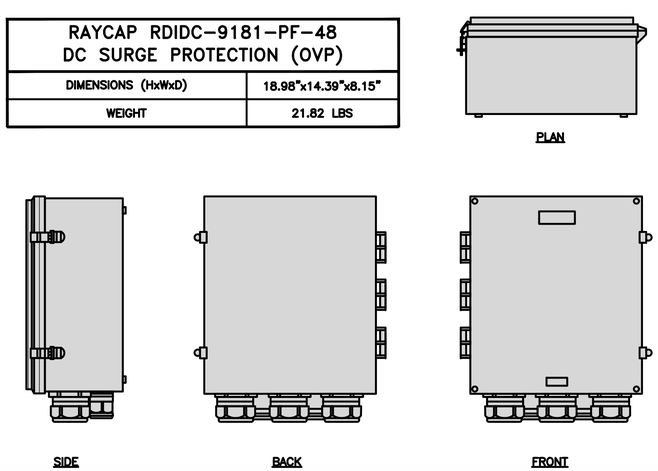

SURGE SUPPRESSION DETAIL (OVP) | NO SCALE | 7

COMMSCOPE 10' CABLE LADDER 6 HOLE RUNGS	
DIMENSIONS (WxL)	20.5"x120"
WEIGHT	43.65 lbs

ITEM#	DESCRIPTION
1	10' ANGLE SIDE RAIL
2	20" LADDER RUNG
3	BACKING PLATE
4	3/8"x1-1/2" GALV BOLT KIT
5	8" GALV J-BOLT KIT
6	3/8" GALV FLAT WASHER
7	3/8" GALV LOCK WASHER
8	3/8" GALV HEX NUT

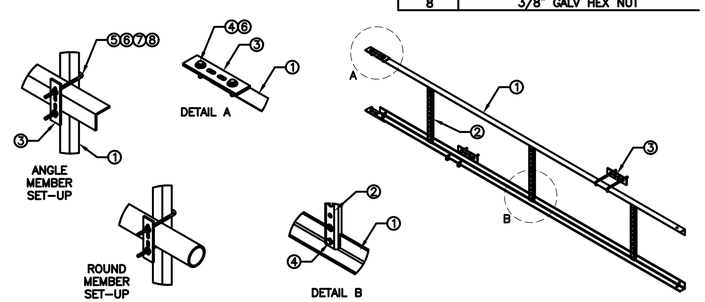

CABLE LADDER DETAIL | NO SCALE | 8

COMMSCOPE V-FRAME MTC3975083	
FACE SIZE	8'-0"
WEIGHT	352.136 lbs

NOTE:
OR DISH Wireless L.L.C.
APPROVED EQUIVALENT

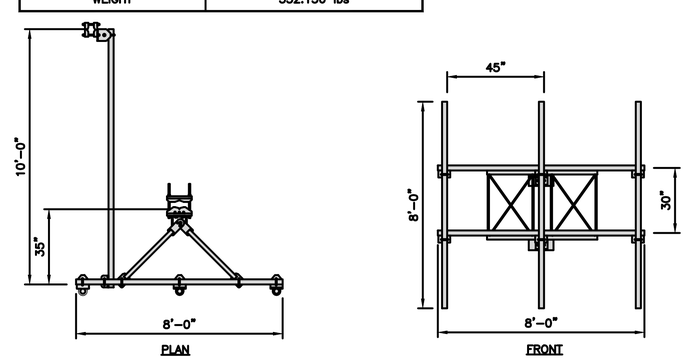

ANTENNA FRAME DETAIL | NO SCALE | 9

dish wireless.
5701 SOUTH SANTA FE DRIVE
LITTLETON, CO 80120

HDG HUDSON Design Group LLC
45 BEECHWOOD DRIVE
N. ANDOVER, MA 01845
TEL: (978) 557-5553
FAX: (978) 336-5586

COMMONWEALTH OF MASSACHUSETTS
DANIEL P. HAMM
CIVIL
No. 40720
REGISTERED PROFESSIONAL ENGINEER

IT IS A VIOLATION OF LAW FOR ANY PERSON, UNLESS THEY ARE ACTING UNDER THE DIRECTION OF A LICENSED PROFESSIONAL ENGINEER, TO ALTER THIS DOCUMENT.

DRAWN BY:	CHECKED BY:	APPROVED BY:
PS	SMA	DPH

RFDS REV #: 0

PRELIMINARY DOCUMENTS

SUBMITTALS

REV	DATE	DESCRIPTION
A	11/15/2021	ISSUED FOR REVIEW
B	01/21/2022	ISSUED FOR REVIEW

A&E PROJECT NUMBER
BOBOS00592A

DISH Wireless L.L.C.
PROJECT INFORMATION
BOBOS00592A
CROWN CASTLE BU#841273
344 ROUTE 6
NORTH TRURO, MA 02652

SHEET TITLE
EQUIPMENT DETAILS

SHEET NUMBER
A-6

NOTES

1. CONTRACTOR SHALL FIELD VERIFY ALL PROPOSED UNDERGROUND UTILITY CONDUIT ROUTE.
2. ANTENNAS AND MOUNTS OMITTED FOR CLARITY.
3. DUE TO UTILITY EASEMENT RIGHTS SPECIFIED IN THE GROUND LEASE, CUSTOMER MAY INSTALL EQUIPMENT WITHIN SPECIFIED UTILITY EASEMENT AREA. "PWR" AND "FBR" PATH DEPICTED ON A–1 AND E–1 REPRESENT PLANNED ROUTING BASED ON BEST AVAILABLE INFORMATION INCLUDING BUT NOT LIMITED TO A SURVEY, EXHIBITS, METES AND BOUNDS OF THE UTILITY EASEMENT, FIELD VERIFICATION, PRIOR PROJECT DOCUMENTATION AND OTHER REAL PROPETY RIGHTS DOCUMENTS. WHEN INSTALLING THE UTILITIES PLEASE LOCATE AND FOLLOW EXISTING PATH. IF EXISTING PATH IS MATERIALLY INCONSISTENT WITH "PWR" AND "FBR" PATH DEPICTED ON A–1 AND E–1 AND SAID VARIANCE IS NOT NOTED ON CDs, PLEASE NOTIFY TOWER OWNER AS FURTHER COORDINATION MAY BE NEEDED.

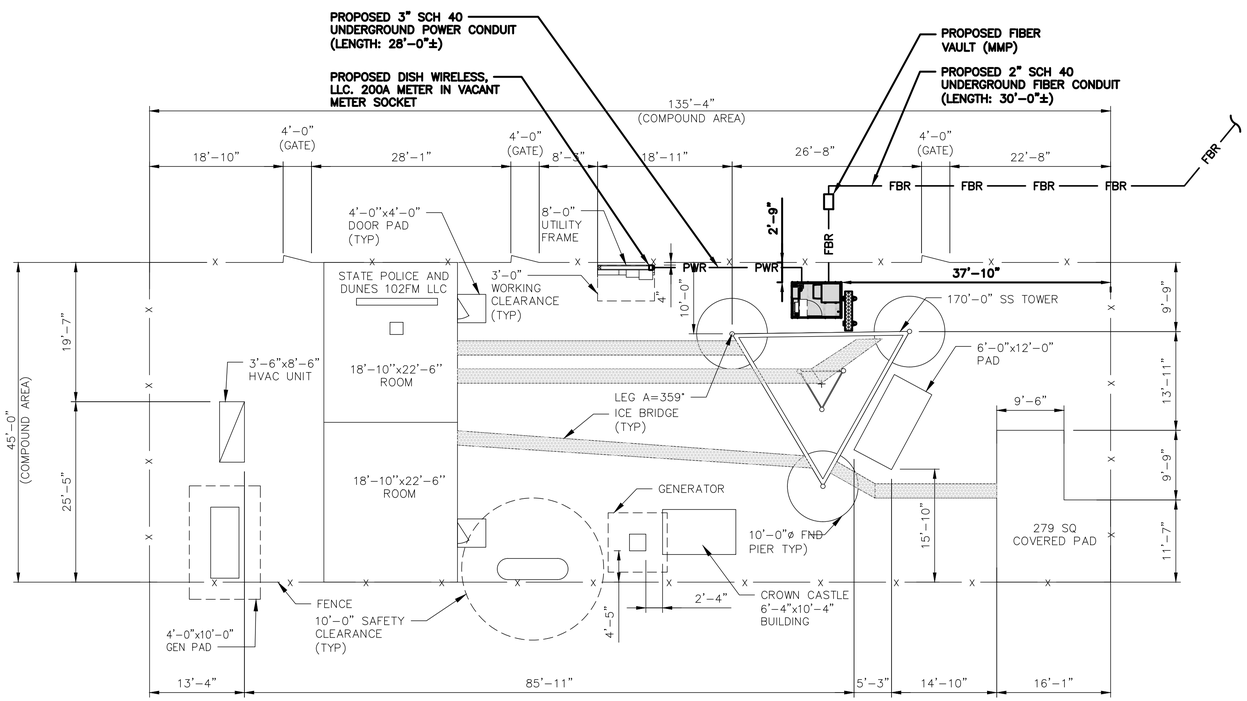

UTILITY ROUTE PLAN

12' 8' 4' 0 10' 20'
3/32"=1'–0"

1

DC POWER WIRING SHALL BE COLOR CODED AT EACH END FOR IDENTIFYING +24V AND –48V CONDUCTORS. RED MARKINGS SHALL IDENTIFY +24V AND BLUE MARKINGS SHALL IDENTIFY –48V.

1. CONTRACTOR SHALL INSPECT THE EXISTING CONDITIONS PRIOR TO SUBMITTING A BID. ANY QUESTIONS ARISING DURING THE BID PERIOD IN REGARDS TO THE CONTRACTOR'S FUNCTIONS, THE SCOPE OF WORK, OR ANY OTHER ISSUE RELATED TO THIS PROJECT SHALL BE BROUGHT UP DURING THE BID PERIOD WITH THE PROJECT MANAGER FOR CLARIFICATION, NOT AFTER THE CONTRACT HAS BEEN AWARDED.
2. ALL ELECTRICAL WORK SHALL BE DONE IN ACCORDANCE WITH CURRENT NATIONAL ELECTRICAL CODES AND ALL STATE AND LOCAL CODES, LAWS, AND ORDINANCES. PROVIDE ALL COMPONENTS AND WIRING SIZES AS REQUIRED TO MEET NEC STANDARDS.
3. LOCATION OF EQUIPMENT, CONDUIT AND DEVICES SHOWN ON THE DRAWINGS ARE APPROXIMATE AND SHALL BE COORDINATED WITH FIELD CONDITIONS PRIOR TO CONSTRUCTION.
4. CONDUIT ROUGH–IN SHALL BE COORDINATED WITH THE MECHANICAL EQUIPMENT TO AVOID LOCATION CONFLICTS. VERIFY WITH THE MECHANICAL EQUIPMENT CONTRACTOR AND COMPLY AS REQUIRED.
5. CONTRACTOR SHALL PROVIDE ALL BREAKERS, CONDUITS AND CIRCUITS AS REQUIRED FOR A COMPLETE SYSTEM.
6. CONTRACTOR SHALL PROVIDE PULL BOXES AND JUNCTION BOXES AS REQUIRED BY THE NEC ARTICLE 314.
7. CONTRACTOR SHALL PROVIDE ALL STRAIN RELIEF AND CABLE SUPPORTS FOR ALL CABLE ASSEMBLIES. INSTALLATION SHALL BE IN ACCORDANCE WITH MANUFACTURER'S SPECIFICATIONS AND RECOMMENDATIONS.
8. ALL DISCONNECTS AND CONTROLLING DEVICES SHALL BE PROVIDED WITH ENGRAVED PHENOLIC NAMEPLATES INDICATING EQUIPMENT CONTROLLED, BRANCH CIRCUITS INSTALLED ON, AND PANEL FIELD LOCATIONS FED FROM.
9. INSTALL AN EQUIPMENT GROUNDING CONDUCTOR IN ALL CONDUITS PER THE SPECIFICATIONS AND NEC 250. THE EQUIPMENT GROUNDING CONDUCTORS SHALL BE BONDED AT ALL JUNCTION BOXES, PULL BOXES, AND ALL DISCONNECT SWITCHES, AND EQUIPMENT CABINETS.
10. ALL NEW MATERIAL SHALL HAVE A U.L. LABEL.
11. PANEL SCHEDULE LOADING AND CIRCUIT ARRANGEMENTS REFLECT POST–CONSTRUCTION EQUIPMENT.
12. CONTRACTOR SHALL BE RESPONSIBLE FOR AS–BUILT PANEL SCHEDULE AND SITE DRAWINGS.
13. ALL TRENCHES IN COMPOUND TO BE HAND DUG

ELECTRICAL NOTES

2

TRURO

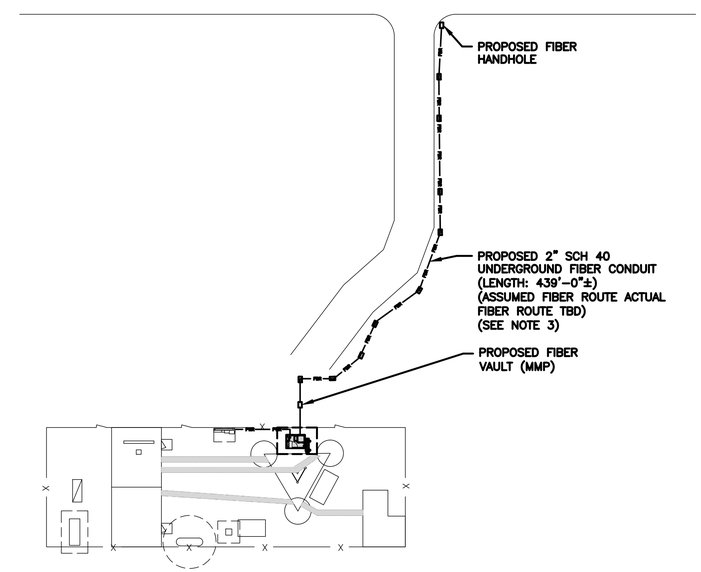

OVERALL UTILITY ROUTE PLAN

NO SCALE

3

dish wireless.
5701 SOUTH SANTA FE DRIVE
LITTLETON, CO 80120

HDG HUDSON Design Group LLC
45 BEECHWOOD DRIVE
N. ANDOVER, MA 01845
TEL: (978) 557-5553
FAX: (978) 336-5586

COMMONWEALTH OF MASSACHUSETTS
DANIEL P. HAMM
CIVIL
No. 40720
REGISTERED PROFESSIONAL ENGINEER

IT IS A VIOLATION OF LAW FOR ANY PERSON, UNLESS THEY ARE ACTING UNDER THE DIRECTION OF A LICENSED PROFESSIONAL ENGINEER, TO ALTER THIS DOCUMENT.

DRAWN BY:	CHECKED BY:	APPROVED BY:
PS	SMA	DPH

RFDS REV #: 0

PRELIMINARY DOCUMENTS

SUBMITTALS

REV	DATE	DESCRIPTION
A	11/15/2021	ISSUED FOR REVIEW
B	01/21/2022	ISSUED FOR REVIEW

A&E PROJECT NUMBER
BOBOS00592A

DISH Wireless L.L.C.
PROJECT INFORMATION
BOBOS00592A
CROWN CASTLE BU#841273
344 ROUTE 6
NORTH TRURO, MA 02652

SHEET TITLE
ELECTRICAL/FIBER ROUTE PLAN AND NOTES

SHEET NUMBER
E-1

CARLON EXPANSION FITTINGS

COUPLING END PART#	MALE TERMINAL ADAPTER END PART#	SIZE	STD CTN QTY.	TRAVEL LENGTH
E945D	E945DX	1/2"	20	4"
E945E	E945EX	3/4"	15	4"
E945F	E945FX	1"	10	4"
E945G	E945GX	1 1/4"	5	4"
E945H	E945HX	1 1/2"	5	4"
E945J	E945JX	2"	15	8"
E945K	E945KX	2 1/2"	10	8"
E945L	E945LX	3"	10	8"
E945M	E945MX	3 1/2"	5	8"
E945N	E945NX	4"	5	8"
E945P	E945PX	5"	1	8"
E945R	E945RX	6"	1	8"

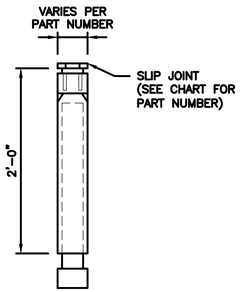

NOTE:
CONTRACTOR TO INSTALL EXPANSION FITTING SLIP JOINT AT METER CENTER CONDUIT TERMINATION, AS PER LOCAL UTILITY POLICY, ORDINANCE AND/OR SPECIFIED REQUIREMENT.

EXPANSION JOINT DETAIL | NO SCALE | 1

TRENCHING NOTES

1. CONTRACTOR SHALL RESTORE THE TRENCH TO ITS ORIGINAL CONDITIONS BY EITHER SEEDING OR SODDING GRASS AREAS, OR REPLACING ASPHALT OR CONCRETE AREAS TO ITS ORIGINAL CROSS SECTION.
2. TRENCHING SAFETY; INCLUDING, BUT NOT LIMITED TO SOIL CLASSIFICATION, SLOPING, AND SHORING, SHALL BE GOVERNED BY THE CURRENT OSHA TRENCHING AND EXCAVATION SAFETY STANDARDS.
3. ALL CONDUITS SHALL BE INSTALLED IN COMPLIANCE WITH THE CURRENT NATIONAL ELECTRIC CODE (NEC) OR AS REQUIRED BY THE LOCAL JURISDICTION, WHICHEVER IS THE MOST STRINGENT.

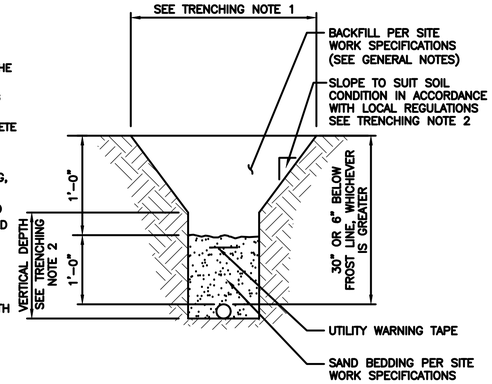

TYPICAL UNDERGROUND TRENCH DETAIL | NO SCALE | 2

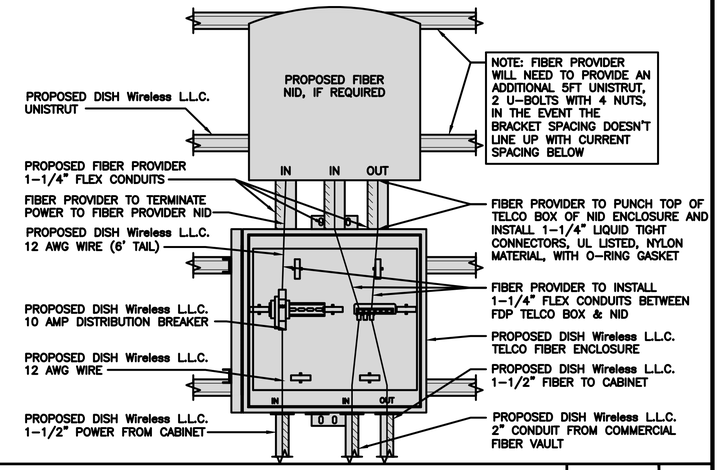

LIT TELCO BOX – INTERIOR WIRING LAYOUT (OPTIONAL) | NO SCALE | 3

NOT USED | NO SCALE | 4

NOT USED | NO SCALE | 5

NOT USED | NO SCALE | 6

NOT USED | NO SCALE | 7

NOT USED | NO SCALE | 8

NOT USED | NO SCALE | 9

dish wireless.
5701 SOUTH SANTA FE DRIVE
LITTLETON, CO 80120

HDG HUDSON Design Group LLC
45 BEECHWOOD DRIVE
N. ANDOVER, MA 01845
TEL: (978) 557-5553
FAX: (978) 336-5586

COMMONWEALTH OF MASSACHUSETTS
DANIEL P. HAMM
CIVIL
No. 40720
REGISTERED PROFESSIONAL ENGINEER

IT IS A VIOLATION OF LAW FOR ANY PERSON, UNLESS THEY ARE ACTING UNDER THE DIRECTION OF A LICENSED PROFESSIONAL ENGINEER, TO ALTER THIS DOCUMENT.

DRAWN BY:	CHECKED BY:	APPROVED BY:
PS	SMA	DPH

RFDS REV #: 0

PRELIMINARY DOCUMENTS

SUBMITTALS

REV	DATE	DESCRIPTION
A	11/15/2021	ISSUED FOR REVIEW
B	01/21/2022	ISSUED FOR REVIEW

A&E PROJECT NUMBER
BOBOS00592A

DISH Wireless L.L.C.
PROJECT INFORMATION
BOBOS00592A
CROWN CASTLE BU#841273
344 ROUTE 6
NORTH TRURO, MA 02652

SHEET TITLE
ELECTRICAL DETAILS

SHEET NUMBER
E-2

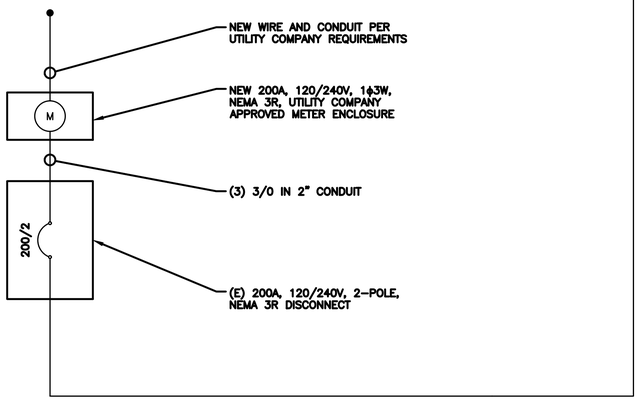

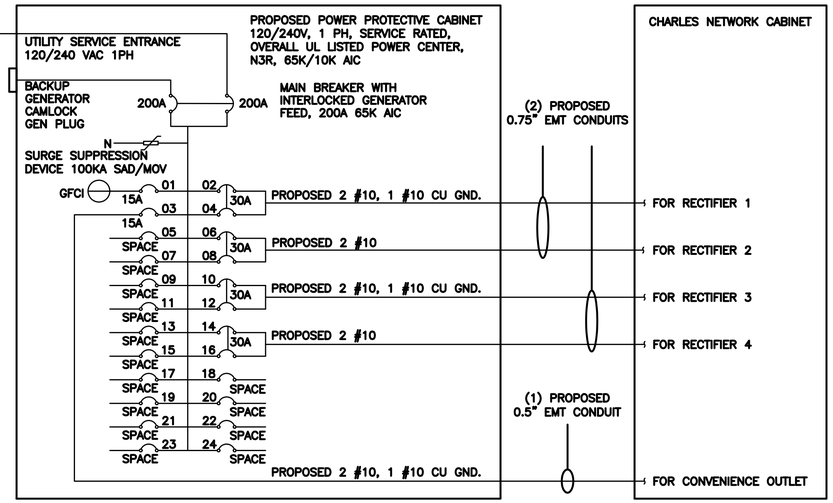

NOTE:
BRANCH CIRCUIT WIRING SUPPLYING RECTIFIERS ARE TO BE RATED UL1015, 105°C, 600V, AND PVC INSULATED, IN THE SIZES SHOWN IN THE ONE-LINE DIAGRAM. CONTRACTOR MAY SUBSTITUTE UL1015 WIRE FOR THWN-2 FOR CONVENIENCE OUTLET BRANCH CIRCUIT.

BREAKERS REQUIRED:
(4) 30A, 2P BREAKER – SQUARE D P/N:QO230
(1) 15A, 1P BREAKER – SQUARE D P/N:QO115

NOTES

THE ENGINEER OF RECORD HAS PERFORMED ALL REQUIRED SHORT CIRCUIT CALCULATIONS AND THE AIC RATINGS FOR EACH DEVICE IS ADEQUATE TO PROTECT THE EQUIPMENT AND THE ELECTRICAL SYSTEM.

THE ENGINEER OF RECORD HAS PERFORMED ALL REQUIRED VOLTAGE DROP CALCULATIONS AND ALL BRANCH CIRCUIT AND FEEDERS COMPLY WITH THE NEC (LISTED ON T-1) ARTICLE 210.19(A)(1) FPN NO. 4.

THE (2) CONDUITS WITH (4) CURRENT CARRYING CONDUCTORS EACH, SHALL APPLY THE ADJUSTMENT FACTOR OF 80% PER 2014/17 NEC TABLE 310.15(B)(3)(a) OR 2020 NEC TABLE 310.15(C)(1) FOR UL1015 WIRE.

#12 FOR 15A-20A/1P BREAKER: 0.8 x 30A = 24.0A
#10 FOR 25A-30A/2P BREAKER: 0.8 x 40A = 32.0A
#8 FOR 35A-40A/2P BREAKER: 0.8 x 55A = 44.0A
#6 FOR 45A-60A/2P BREAKER: 0.8 x 75A = 60.0A

CONDUIT SIZING: AT 40% FILL PER NEC CHAPTER 9, TABLE 4, ARTICLE 358.
0.5" CONDUIT – 0.122 SQ. IN AREA
0.75" CONDUIT – 0.213 SQ. IN AREA
2.0" CONDUIT – 1.316 SQ. IN AREA
3.0" CONDUIT – 2.907 SQ. IN AREA

CABINET CONVENIENCE OUTLET CONDUCTORS (1 CONDUIT): USING THWN-2, CU.

#10 – 0.0211 SQ. IN X 2 = 0.0422 SQ. IN
#10 – 0.0211 SQ. IN X 1 = 0.0211 SQ. IN <GROUND
TOTAL = 0.0633 SQ. IN

0.5" EMT CONDUIT IS ADEQUATE TO HANDLE THE TOTAL OF (3) WIRES, INCLUDING GROUND WIRE, AS INDICATED ABOVE.

RECTIFIER CONDUCTORS (2 CONDUITS): USING UL1015, CU.

#10 – 0.0266 SQ. IN X 4 = 0.1064 SQ. IN
#10 – 0.0082 SQ. IN X 1 = 0.0082 SQ. IN <BARE GROUND
TOTAL = 0.1146 SQ. IN

0.75" EMT CONDUIT IS ADEQUATE TO HANDLE THE TOTAL OF (5) WIRES, INCLUDING GROUND WIRE, AS INDICATED ABOVE.

PPC FEED CONDUCTORS (1 CONDUIT): USING THWN, CU.

3/0 – 0.2679 SQ. IN X 3 = 0.8037 SQ. IN
#6 – 0.0507 SQ. IN X 1 = 0.0507 SQ. IN <GROUND
TOTAL = 0.8544 SQ. IN

3.0" SCH 40 PVC CONDUIT IS ADEQUATE TO HANDLE THE TOTAL OF (4) WIRES, INCLUDING GROUND WIRE, AS INDICATED ABOVE.

PPC ONE-LINE DIAGRAM

NO SCALE | 1

PROPOSED CHARLES PANEL SCHEDULE

LOAD SERVED	VOLT AMPS (WATTS) L1	VOLT AMPS (WATTS) L2	TRIP	CKT #	PHASE	PHASE	CKT #	TRIP	VOLT AMPS (WATTS) L1	VOLT AMPS (WATTS) L2	LOAD SERVED
PPC GFCI OUTLET	180		15A	1	A		2	30A	2880		ABB/GE INFINITY RECTIFIER 1
CHARLES GFCI OUTLET		180	15A	3		B	4			2880	
-SPACE-				5	A		6	30A	2880		ABB/GE INFINITY RECTIFIER 2
-SPACE-				7		B	8			2880	
-SPACE-				9	A		10	30A	2880		ABB/GE INFINITY RECTIFIER 3
-SPACE-				11		B	12			2880	
-SPACE-				13	A		14	30A	2880		ABB/GE INFINITY RECTIFIER 4
-SPACE-				15		B	16			2880	
-SPACE-				17	A		18				-SPACE-
-SPACE-				19		B	20				-SPACE-
-SPACE-				21	A		22				-SPACE-
-SPACE-				23		B	24				-SPACE-
VOLTAGE AMPS	180	180							11520	11520	
200A MCB, 1ϕ, 24 SPACE, 120/240V				L1		L2					
MB RATING: 65,000 AIC				11700		11700		VOLTAGE AMPS			
				98		98		AMPS			
				98				MAX AMPS			
				123				MAX 125%			

PANEL SCHEDULE

NO SCALE | 2

NOT USED

NO SCALE | 3

dish wireless.
5701 SOUTH SANTA FE DRIVE
LITTLETON, CO 80120

HDG HUDSON Design Group LLC
45 BEECHWOOD DRIVE
N. ANDOVER, MA 01845
TEL: (978) 557-5553
FAX: (978) 336-5586

COMMONWEALTH OF MASSACHUSETTS
DANIEL P. HAMM
CIVIL
No. 40720
REGISTERED PROFESSIONAL ENGINEER

IT IS A VIOLATION OF LAW FOR ANY PERSON, UNLESS THEY ARE ACTING UNDER THE DIRECTION OF A LICENSED PROFESSIONAL ENGINEER, TO ALTER THIS DOCUMENT.

DRAWN BY:	CHECKED BY:	APPROVED BY:
PS	SMA	DPH

RFDS REV #: 0

PRELIMINARY DOCUMENTS

SUBMITTALS

REV	DATE	DESCRIPTION
A	11/15/2021	ISSUED FOR REVIEW
B	01/21/2022	ISSUED FOR REVIEW

A&E PROJECT NUMBER
BOBOS00592A

DISH Wireless L.L.C.
PROJECT INFORMATION
BOBOS00592A
CROWN CASTLE BU#841273
344 ROUTE 6
NORTH TRURO, MA 02652

SHEET TITLE
ELECTRICAL ONE-LINE, FAULT CALCS & PANEL SCHEDULE

SHEET NUMBER
E-3

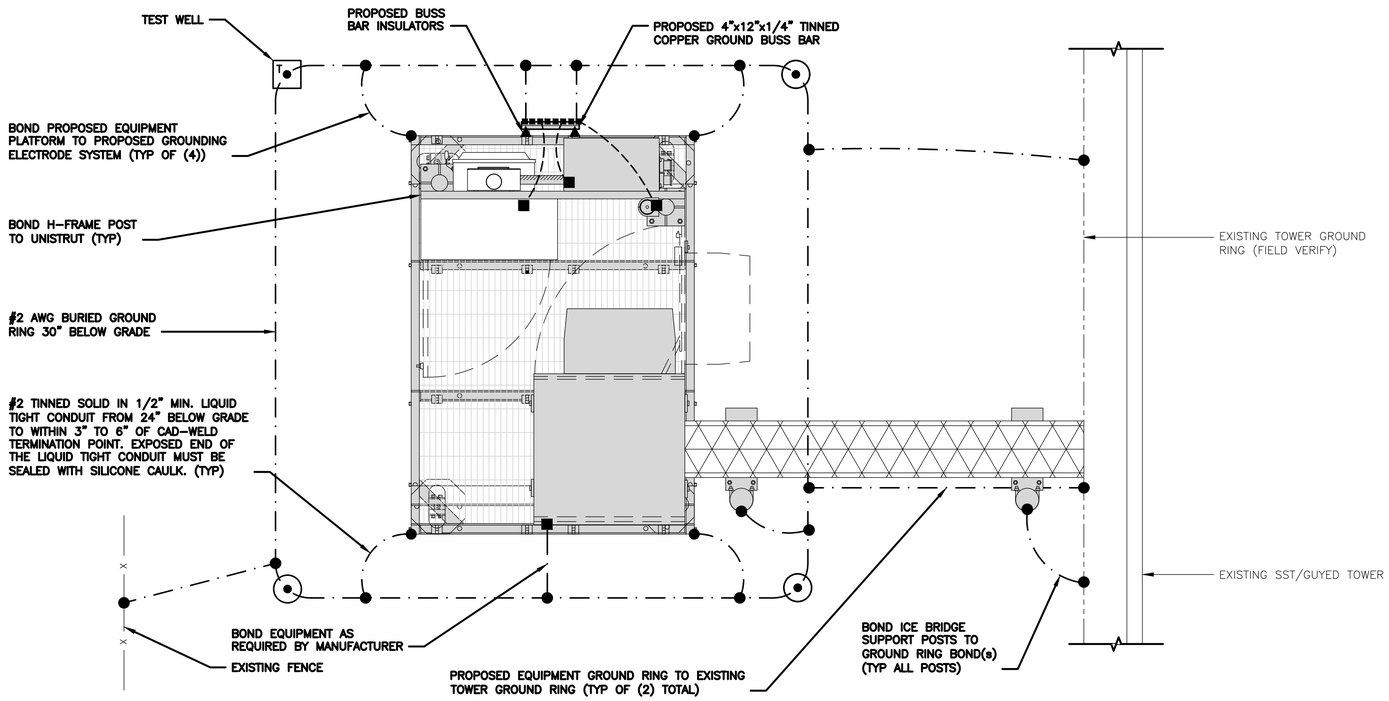

TYPICAL EQUIPMENT GROUNDING PLAN | NO SCALE | 1

NOTES

ANTENNAS AND OVP SHOWN ARE GENERIC AND NOT REFERENCING TO A SPECIFIC MANUFACTURER. THIS LAYOUT IS FOR REFERENCE PURPOSES ONLY

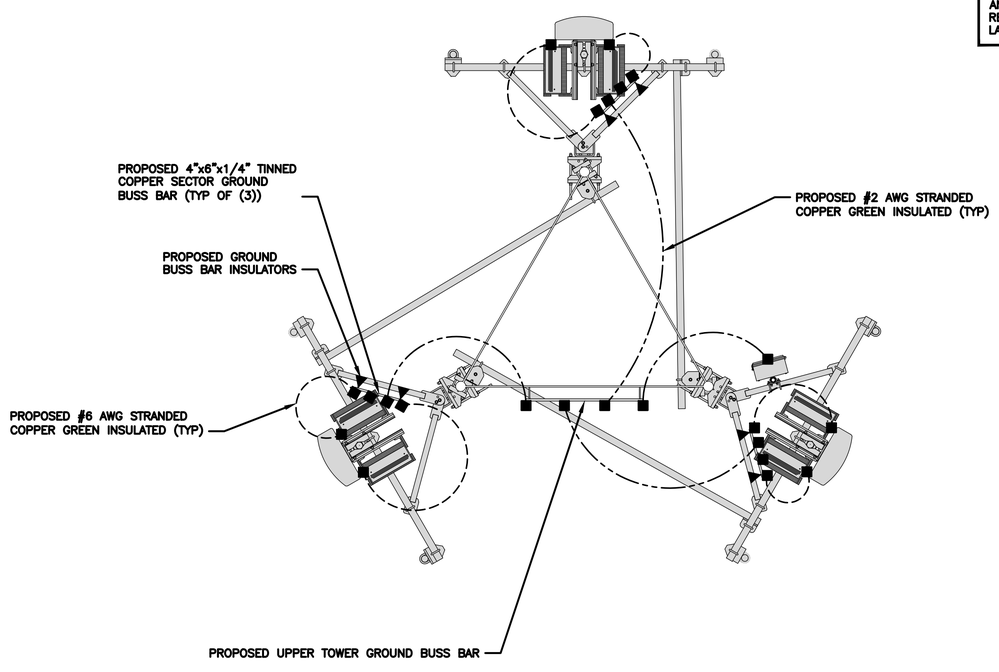

TYPICAL ANTENNA GROUNDING PLAN | NO SCALE | 2

- EXOTHERMIC CONNECTION
- MECHANICAL CONNECTION
- GROUND BUS BAR
- GROUND ROD
- TEST GROUND ROD WITH INSPECTION SLEEVE
- #6 AWG STRANDED & INSULATED
- #2 AWG SOLID COPPER TINNED
- #2 AWG STRANDED & INSULATED
- BUSS BAR INSULATOR

GROUNDING LEGEND

1. GROUNDING IS SHOWN DIAGRAMMATICALLY ONLY.
2. CONTRACTOR SHALL GROUND ALL EQUIPMENT AS A COMPLETE SYSTEM. GROUNDING SHALL BE IN COMPLIANCE WITH NEC SECTION 250 AND DISH Wireless L.L.C. GROUNDING AND BONDING REQUIREMENTS AND MANUFACTURER'S SPECIFICATIONS.
3. ALL GROUND CONDUCTORS SHALL BE COPPER; NO ALUMINUM CONDUCTORS SHALL BE USED.

GROUNDING KEY NOTES

(A) EXTERIOR GROUND RING: #2 AWG SOLID COPPER, BURIED AT A DEPTH OF AT LEAST 30 INCHES BELOW GRADE, OR 6 INCHES BELOW THE FROST LINE AND APPROXIMATELY 24 INCHES FROM THE EXTERIOR WALL OR FOOTING.

(B) TOWER GROUND RING: THE GROUND RING SYSTEM SHALL BE INSTALLED AROUND AN ANTENNA TOWER'S LEGS, AND/OR GUY ANCHORS. WHERE SEPARATE SYSTEMS HAVE BEEN PROVIDED FOR THE TOWER AND THE BUILDING, AT LEAST TWO BONDS SHALL BE MADE BETWEEN THE TOWER RING GROUND SYSTEM AND THE BUILDING RING GROUND SYSTEM USING MINIMUM #2 AWG SOLID COPPER CONDUCTORS.

(C) INTERIOR GROUND RING: #2 AWG STRANDED GREEN INSULATED COPPER CONDUCTOR EXTENDED AROUND THE PERIMETER OF THE EQUIPMENT AREA. ALL NON-TELECOMMUNICATIONS RELATED METALLIC OBJECTS FOUND WITHIN A SITE SHALL BE GROUNDED TO THE INTERIOR GROUND RING WITH #6 AWG STRANDED GREEN INSULATED CONDUCTOR.

(D) BOND TO INTERIOR GROUND RING: #2 AWG SOLID TINNED COPPER WIRE PRIMARY BONDS SHALL BE PROVIDED AT LEAST AT FOUR POINTS ON THE INTERIOR GROUND RING, LOCATED AT THE CORNERS OF THE BUILDING.

(E) GROUND ROD: UL LISTED COPPER CLAD STEEL. MINIMUM 1/2" DIAMETER BY EIGHT FEET LONG. GROUND RODS SHALL BE INSTALLED WITH INSPECTION SLEEVES. GROUND RODS SHALL BE DRIVEN TO THE DEPTH OF GROUND RING CONDUCTOR.

(F) CELL REFERENCE GROUND BAR: POINT OF GROUND REFERENCE FOR ALL COMMUNICATIONS EQUIPMENT FRAMES. ALL BONDS ARE MADE WITH #2 AWG UNLESS NOTED OTHERWISE STRANDED GREEN INSULATED COPPER CONDUCTORS. BOND TO GROUND RING WITH (2) #2 SOLID TINNED COPPER CONDUCTORS.

(G) HATCH PLATE GROUND BAR: BOND TO THE INTERIOR GROUND RING WITH TWO #2 AWG STRANDED GREEN INSULATED COPPER CONDUCTORS. WHEN A HATCH-PLATE AND A CELL REFERENCE GROUND BAR ARE BOTH PRESENT, THE CRGB MUST BE CONNECTED TO THE HATCH-PLATE AND TO THE INTERIOR GROUND RING USING (2) TWO #2 AWG STRANDED GREEN INSULATED COPPER CONDUCTORS EACH.

(H) EXTERIOR CABLE ENTRY PORT GROUND BARS: LOCATED AT THE ENTRANCE TO THE CELL SITE BUILDING. BOND TO GROUND RING WITH A #2 AWG SOLID TINNED COPPER CONDUCTORS WITH AN EXOTHERMIC WELD AND INSPECTION SLEEVE.

(I) TELCO GROUND BAR: BOND TO BOTH CELL REFERENCE GROUND BAR OR EXTERIOR GROUND RING.

(J) FRAME BONDING: THE BONDING POINT FOR TELECOM EQUIPMENT FRAMES SHALL BE THE GROUND BUS THAT IS NOT ISOLATED FROM THE EQUIPMENTS METAL FRAMEWORK.

(K) INTERIOR UNIT BONDS: METAL FRAMES, CABINETS AND INDIVIDUAL METALLIC UNITS LOCATED WITH THE AREA OF THE INTERIOR GROUND RING REQUIRE A #6 AWG STRANDED GREEN INSULATED COPPER BOND TO THE INTERIOR GROUND RING.

(L) FENCE AND GATE GROUNDING: METAL FENCES WITHIN 7 FEET OF THE EXTERIOR GROUND RING OR OBJECTS BONDED TO THE EXTERIOR GROUND RING SHALL BE BONDED TO THE GROUND RING WITH A #2 AWG SOLID TINNED COPPER CONDUCTOR AT AN INTERVAL NOT EXCEEDING 25 FEET. BONDS SHALL BE MADE AT EACH GATE POST AND ACROSS GATE OPENINGS.

(M) EXTERIOR UNIT BONDS: METALLIC OBJECTS, EXTERNAL TO OR MOUNTED TO THE BUILDING, SHALL BE BONDED TO THE EXTERIOR GROUND RING. USING #2 TINNED SOLID COPPER WIRE

(N) ICE BRIDGE SUPPORTS: EACH ICE BRIDGE LEG SHALL BE BONDED TO THE GROUND RING WITH #2 AWG BARE TINNED COPPER CONDUCTOR. PROVIDE EXOTHERMIC WELDS AT BOTH THE ICE BRIDGE LEG AND BURIED GROUND RING.

(O) DURING ALL DC POWER SYSTEM CHANGES INCLUDING DC SYSTEM CHANGE OUTS, RECTIFIER REPLACEMENTS OR ADDITIONS, BREAKER DISTRIBUTION CHANGES, BATTERY ADDITIONS, BATTERY REPLACEMENTS AND INSTALLATIONS OR CHANGES TO DC CONVERTER SYSTEMS IT SHALL BE REQUIRED THAT SERVICE CONTRACTORS VERIFY ALL DC POWER SYSTEMS ARE EQUIPPED WITH A MASTER DC SYSTEM RETURN GROUND CONDUCTOR FROM THE DC POWER SYSTEM COMMON RETURN BUS DIRECTLY CONNECTED TO THE CELL SITE REFERENCE GROUND BAR

(P) TOWER TOP COLLECTOR BUSS BAR IS TO BE MECHANICALLY BONDED TO TOWER STEEL.

REFER TO DISH Wireless L.L.C. GROUNDING NOTES.

GROUNDING KEY NOTES | NO SCALE | 3

dish wireless.
5701 SOUTH SANTA FE DRIVE
LITTLETON, CO 80120

HDG HUDSON Design Group LLC
45 BEECHWOOD DRIVE
N. ANDOVER, MA 01845
TEL: (978) 557-5553
FAX: (978) 336-5586

COMMONWEALTH OF MASSACHUSETTS
DANIEL P. HAMM
CIVIL
No. 40720
REGISTERED PROFESSIONAL ENGINEER

IT IS A VIOLATION OF LAW FOR ANY PERSON, UNLESS THEY ARE ACTING UNDER THE DIRECTION OF A LICENSED PROFESSIONAL ENGINEER, TO ALTER THIS DOCUMENT.

DRAWN BY:	CHECKED BY:	APPROVED BY:
PS	SMA	DPH

RFDS REV #: 0

PRELIMINARY DOCUMENTS

SUBMITTALS

REV	DATE	DESCRIPTION
A	11/15/2021	ISSUED FOR REVIEW
B	01/21/2022	ISSUED FOR REVIEW

A&E PROJECT NUMBER
BOBOS00592A

DISH Wireless L.L.C.
PROJECT INFORMATION
BOBOS00592A
CROWN CASTLE BU#841273
344 ROUTE 6
NORTH TRURO, MA 02652

SHEET TITLE
GROUNDING PLANS AND NOTES

SHEET NUMBER
G-1

NOTES

EQUIPMENT CABINET OMITTED FOR CLARITY

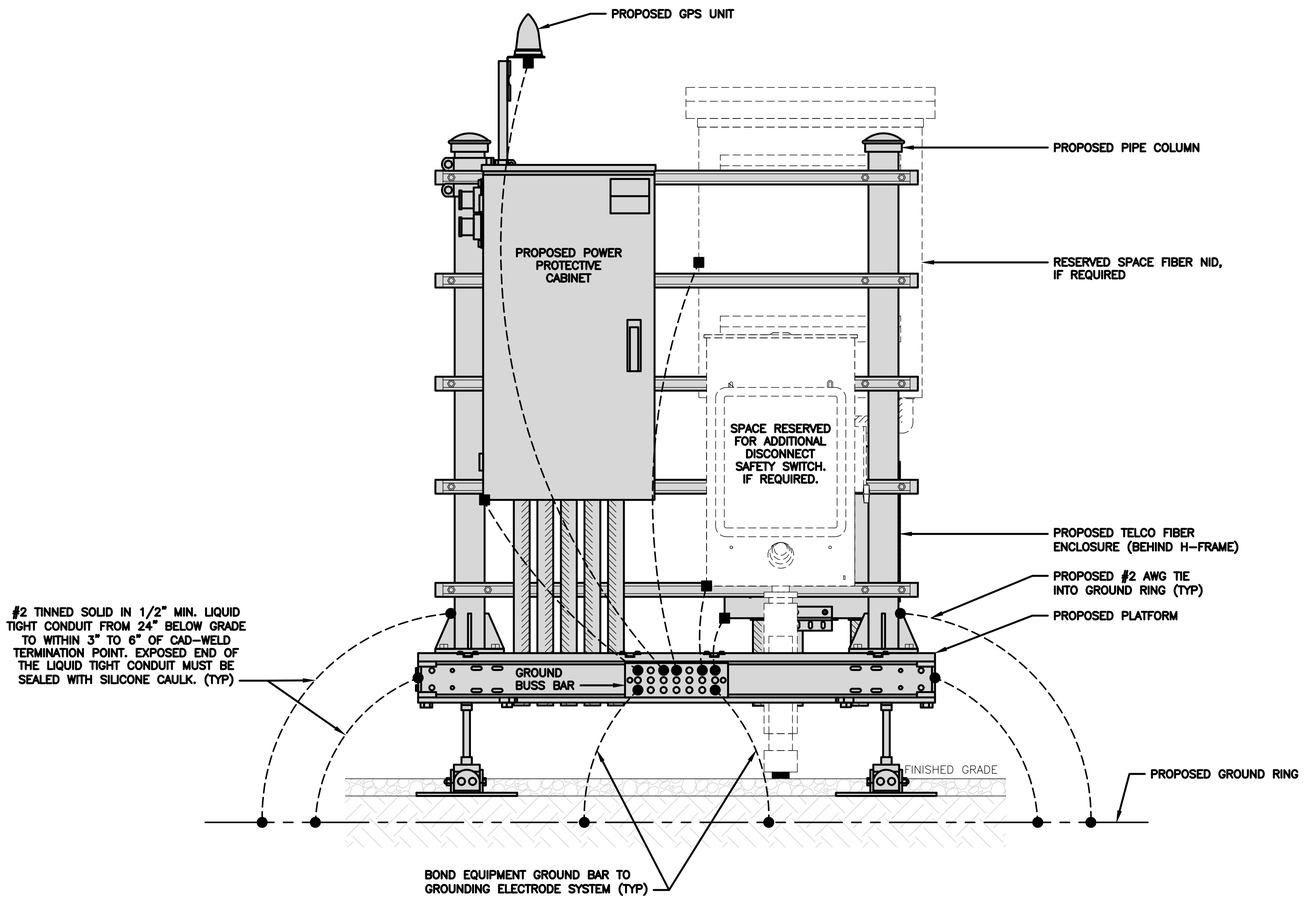

H-FRAME GROUNDING DETAIL | NO SCALE | 1

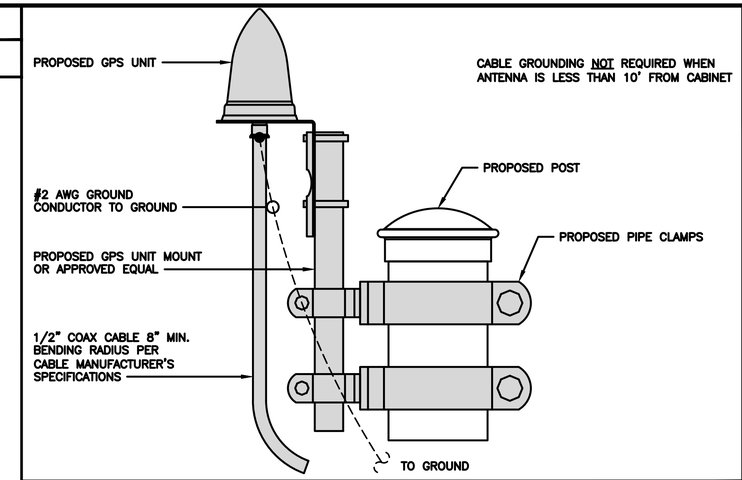

TYPICAL GPS UNIT GROUNDING | NO SCALE | 2

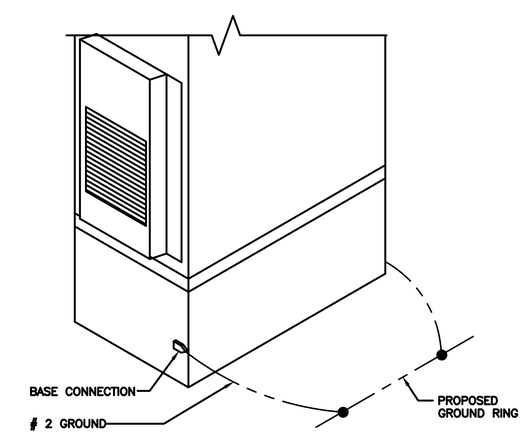

OUTDOOR CABINET GROUNDING | NO SCALE | 3

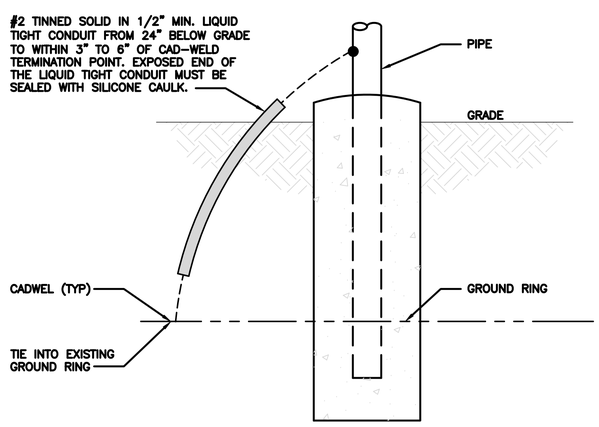

TRANSITIONING GROUND DETAIL | NO SCALE | 4

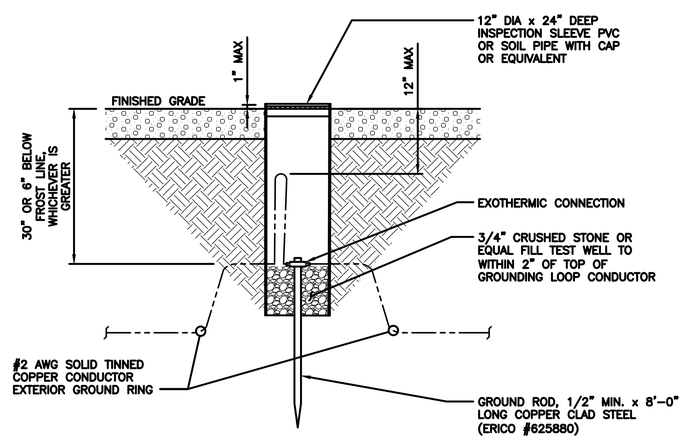

TYPICAL TEST GROUND ROD WITH INSPECTION SLEEVE | NO SCALE | 5

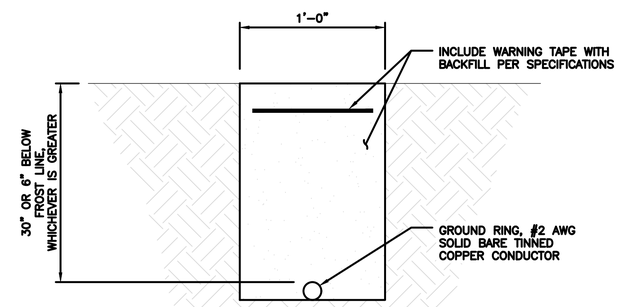

TYPICAL GROUND RING TRENCH | NO SCALE | 6

dish wireless.
5701 SOUTH SANTA FE DRIVE
LITTLETON, CO 80120

HDG HUDSON Design Group LLC
45 BEECHWOOD DRIVE
N. ANDOVER, MA 01845
TEL: (978) 557-5553
FAX: (978) 336-5586

COMMONWEALTH OF MASSACHUSETTS
DANIEL P. HAMM
CIVIL
No. 40720
REGISTERED PROFESSIONAL ENGINEER

IT IS A VIOLATION OF LAW FOR ANY PERSON, UNLESS THEY ARE ACTING UNDER THE DIRECTION OF A LICENSED PROFESSIONAL ENGINEER, TO ALTER THIS DOCUMENT.

DRAWN BY:	CHECKED BY:	APPROVED BY:
PS	SMA	DPH

RFDS REV #: 0

PRELIMINARY DOCUMENTS

SUBMITTALS

REV	DATE	DESCRIPTION
A	11/15/2021	ISSUED FOR REVIEW
B	01/21/2022	ISSUED FOR REVIEW

A&E PROJECT NUMBER
BOBOS00592A

DISH Wireless L.L.C.
PROJECT INFORMATION
BOBOS00592A
CROWN CASTLE BU#841273
344 ROUTE 6
NORTH TRURO, MA 02652

SHEET TITLE
GROUNDING DETAILS

SHEET NUMBER
G-2

1. EXOTHERMIC WELD (2) TWO, #2 AWG BARE TINNED SOLID COPPER CONDUCTORS TO GROUND BAR. ROUTE CONDUCTORS TO BURIED GROUND RING AND PROVIDE PARALLEL EXOTHERMIC WELD.
2. ALL EXTERIOR GROUNDING HARDWARE SHALL BE STAINLESS STEEL 3/8" DIAMETER OR LARGER. ALL HARDWARE 18-8 STAINLESS STEEL INCLUDING LOCK WASHERS, COAT ALL SURFACES WITH AN ANTI-OXIDANT COMPOUND BEFORE MATING.
3. FOR GROUND BOND TO STEEL ONLY: COAT ALL SURFACES WITH AN ANTI-OXIDANT COMPOUND BEFORE MATING.
4. DO NOT INSTALL CABLE GROUNDING KIT AT A BEND AND ALWAYS DIRECT GROUND CONDUCTOR DOWN TO GROUNDING BUS.
5. NUT & WASHER SHALL BE PLACED ON THE FRONT SIDE OF THE GROUND BAR AND BOLTED ON THE BACK SIDE.
6. ALL GROUNDING PARTS AND EQUIPMENT TO BE SUPPLIED AND INSTALLED BY CONTRACTOR.
7. THE CONTRACTOR SHALL BE RESPONSIBLE FOR INSTALLING ADDITIONAL GROUND BAR AS REQUIRED.
8. ENSURE THE WIRE INSULATION TERMINATION IS WITHIN 1/8" OF THE BARREL (NO SHINERS).

TYPICAL GROUNDING NOTES | NO SCALE | 1

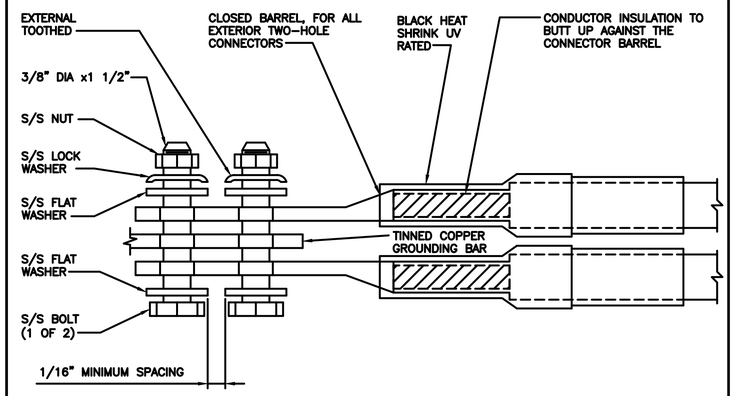

TYPICAL EXTERIOR TWO HOLE LUG | NO SCALE | 2

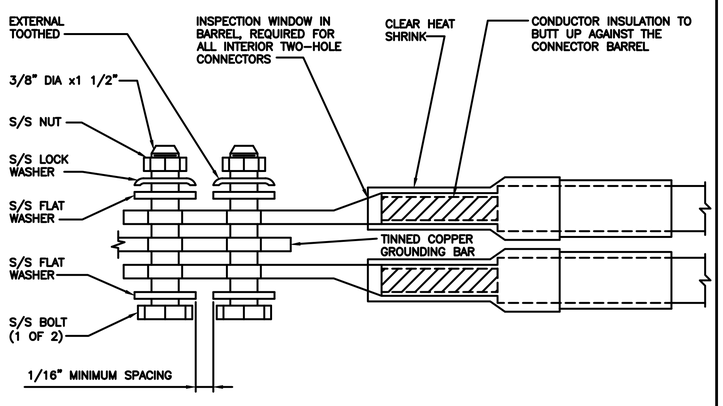

TYPICAL INTERIOR TWO HOLE LUG | NO SCALE | 3

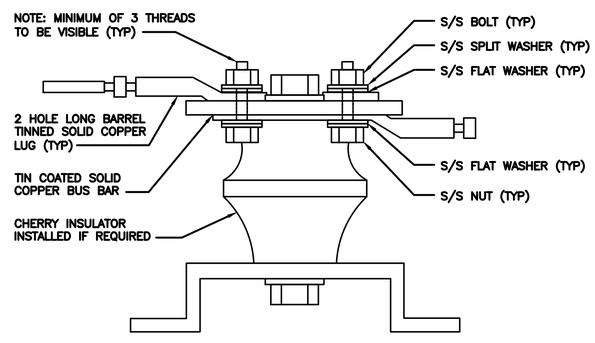

LUG DETAIL | NO SCALE | 4

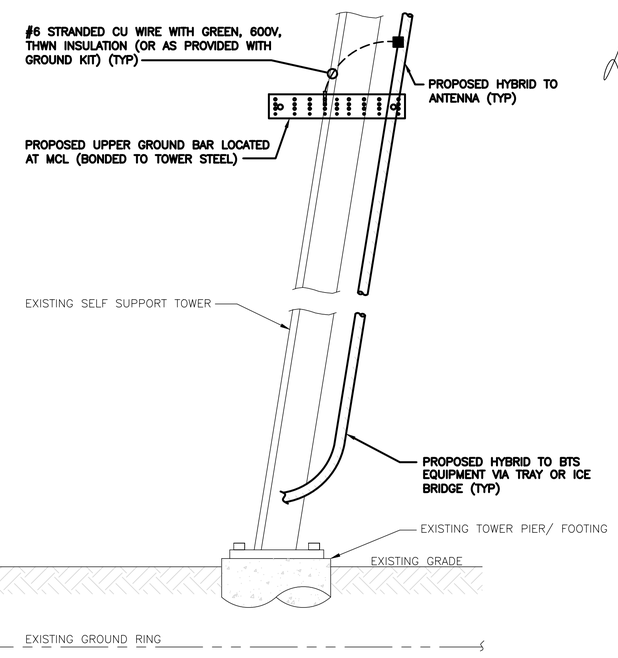

NOTES:

1. ONLY MECHANICAL CONNECTIONS ARE ALLOWED TO BE MADE TO TOWERS. ALL MECHANICAL CONNECTIONS SHALL BE TREATED WITH AN ANTI-OXIDANT COATING.
2. ALL TOWER GROUNDING SYSTEMS SHALL COMPLY WITH THE REQUIREMENTS OF THE RECOGNIZED EDITION OF ANSI/TIA 222 AND NFPA 780.

TYPICAL ANTENNA CABLE GROUNDING | NO SCALE | 5

dish wireless.
5701 SOUTH SANTA FE DRIVE
LITTLETON, CO 80120

HDG HUDSON Design Group LLC
45 BEECHWOOD DRIVE
N. ANDOVER, MA 01845
TEL: (978) 557-5553
FAX: (978) 336-5586

COMMONWEALTH OF MASSACHUSETTS
DANIEL P. HAMM
CIVIL
No. 40720
REGISTERED PROFESSIONAL ENGINEER

IT IS A VIOLATION OF LAW FOR ANY PERSON, UNLESS THEY ARE ACTING UNDER THE DIRECTION OF A LICENSED PROFESSIONAL ENGINEER, TO ALTER THIS DOCUMENT.

DRAWN BY:	CHECKED BY:	APPROVED BY:
PS	SMA	DPH

RFDS REV #: 0

PRELIMINARY DOCUMENTS

SUBMITTALS

REV	DATE	DESCRIPTION
A	11/15/2021	ISSUED FOR REVIEW
B	01/21/2022	ISSUED FOR REVIEW

A&E PROJECT NUMBER
BOBOS00592A

DISH Wireless L.L.C.
PROJECT INFORMATION
BOBOS00592A
CROWN CASTLE BU#841273
344 ROUTE 6
NORTH TRURO, MA 02652

SHEET TITLE
GROUNDING DETAILS

SHEET NUMBER
G-3

HYBRID/DISCREET CABLES

3/4" TAPE WIDTHS WITH 3/4" SPACING

LOW–BAND RRH
(600 MHz N71 BASEBAND) +
(850 MHz N26 BAND) +
(700 MHz N29 BAND) – OPTIONAL PER MARKET

ADD FREQUENCY COLOR TO SECTOR BAND
(CBRS WILL USE YELLOW BAND)

ALPHA RRH				BETA RRH				GAMMA RRH			
PORT 1 + SLANT	PORT 2 – SLANT	PORT 3 + SLANT	PORT 4 – SLANT	PORT 1 + SLANT	PORT 2 – SLANT	PORT 3 + SLANT	PORT 4 – SLANT	PORT 1 + SLANT	PORT 2 – SLANT	PORT 3 + SLANT	PORT 4 – SLANT
RED	RED	RED	RED	BLUE	BLUE	BLUE	BLUE	GREEN	GREEN	GREEN	GREEN
ORANGE	ORANGE	RED	RED	ORANGE	ORANGE	BLUE	BLUE	ORANGE	ORANGE	GREEN	GREEN
	WHITE (–) PORT	ORANGE	ORANGE		WHITE (–) PORT	ORANGE	ORANGE		WHITE (–) PORT	ORANGE	ORANGE
			WHITE (–) PORT				WHITE (–) PORT				WHITE (–) PORT

MID–BAND RRH
(AWS BANDS N66+N70)

ADD FREQUENCY COLOR TO SECTOR BAND
(CBRS WILL USE YELLOW BANDS)

RED	RED	RED	RED	BLUE	BLUE	BLUE	BLUE	GREEN	GREEN	GREEN	GREEN
PURPLE	PURPLE	RED	RED	PURPLE	PURPLE	BLUE	BLUE	PURPLE	PURPLE	GREEN	GREEN
	WHITE (–) PORT	PURPLE	PURPLE		WHITE (–) PORT	PURPLE	PURPLE		WHITE (–) PORT	PURPLE	PURPLE
			WHITE (–) PORT				WHITE (–) PORT				WHITE (–) PORT

HYBRID/DISCREET CABLES

INCLUDE SECTOR BANDS BEING SUPPORTED ALONG WITH FREQUENCY BANDS.

EXAMPLE 1 – HYBRID, OR DISCREET, SUPPORTS ALL SECTORS, BOTH LOW–BANDS AND MID–BANDS.

EXAMPLE 2 – HYBRID, OR DISCREET, SUPPORTS CBRS ONLY, ALL SECTORS.

EXAMPLE 3 – MAIN COAX WITH GROUND MOUNTED RRHs.

EXAMPLE 1	EXAMPLE 2	EXAMPLE 3 COAX#1 (ALPHA)	CANISTER COAX #2 (ALPHA)
RED	RED	RED	RED
BLUE	BLUE		RED
GREEN	GREEN		
ORANGE	YELLOW		
PURPLE			

FIBER JUMPERS TO RRHs

LOW–BAND HHR FIBER CABLES HAVE SECTOR STRIPE ONLY.

LOW BAND RRH	MID BAND RRH	LOW BAND RRH	MID BAND RRH	LOW BAND RRH	MID BAND RRH
RED	RED	BLUE	BLUE	GREEN	GREEN
ORANGE	PURPLE	ORANGE	PURPLE	ORANGE	PURPLE

POWER CABLES TO RRHs

LOW–BAND RRH POWER CABLES HAVE SECTOR STRIPE ONLY

LOW BAND RRH	MID BAND RRH	LOW BAND RRH	MID BAND RRH	LOW BAND RRH	MID BAND RRH
RED	RED	BLUE	BLUE	GREEN	GREEN
ORANGE	PURPLE	ORANGE	PURPLE	ORANGE	PURPLE

RET MOTORS AT ANTENNAS

RET CONTROL IS HANDLED BY THE MID–BAND RRH WHEN ONE SET OF RET PORTS EXIST ON ANTENNA.

SEPARATE RET CABLES ARE USED WHEN ANTENNA PORTS PROVIDE INPUTS FOR BOTH LOW AND MID BANDS.

ANTENNA 1 MID BAND IN	ANTENNA 1 LOW BAND IN	ANTENNA 1 MID BAND IN	ANTENNA 1 LOW BAND IN	ANTENNA 1 MID BAND IN	ANTENNA 1 LOW BAND IN
RED	RED	BLUE	BLUE	GREEN	GREEN
PURPLE	ORANGE	PURPLE	ORANGE	PURPLE	ORANGE

MICROWAVE RADIO LINKS

LINKS WILL HAVE A 1.5–2 INCH WHITE WRAP WITH THE AZIMUTH COLOR OVERLAPPING IN THE MIDDLE.
ADD ADDITIONAL SECTOR COLOR BANDS FOR EACH ADDITIONAL MW RADIO.

MICROWAVE CABLES WILL REQUIRE P–TOUCH LABELS INSIDE THE CABINET TO IDENTIFY THE LOCAL AND REMOTE SITE ID's.

FORWARD AZIMUTH OF 0–120 DEGREES		FORWARD AZIMUTH OF 120–240 DEGREES		FORWARD AZIMUTH OF 240–359 DEGREES	
PRIMARY	SECONDARY	PRIMARY	SECONDARY	PRIMARY	SECONDARY
WHITE	WHITE	WHITE	WHITE	WHITE	WHITE
RED	RED	BLUE	BLUE	GREEN	GREEN
WHITE	WHITE	WHITE	WHITE	WHITE	WHITE
	RED		BLUE		GREEN
	WHITE		WHITE		WHITE

RF CABLE COLOR CODES | NO SCALE | 1

LOW BANDS (N71+N26)
OPTIONAL – (N29)
ORANGE

AWS
(N66+N70+H–BLOCK)
PURPLE

CBRS TECH
(3 GHz)
YELLOW

NEGATIVE SLANT PORT
ON ANT/RRH
WHITE

ALPHA SECTOR
RED

BETA SECTOR
BLUE

GAMMA SECTOR
GREEN

COLOR IDENTIFIER | NO SCALE | 2

NOT USED | NO SCALE | 3

NOT USED | NO SCALE | 4

dish wireless.
5701 SOUTH SANTA FE DRIVE
LITTLETON, CO 80120

HDG HUDSON Design Group LLC
45 BEECHWOOD DRIVE
N. ANDOVER, MA 01845
TEL: (978) 557-5553
FAX: (978) 336-5586

COMMONWEALTH OF MASSACHUSETTS
DANIEL P. HAMM
CIVIL
No. 40720
REGISTERED PROFESSIONAL ENGINEER

IT IS A VIOLATION OF LAW FOR ANY PERSON, UNLESS THEY ARE ACTING UNDER THE DIRECTION OF A LICENSED PROFESSIONAL ENGINEER, TO ALTER THIS DOCUMENT.

DRAWN BY:	CHECKED BY:	APPROVED BY:
PS	SMA	DPH

RFDS REV #: 0

PRELIMINARY DOCUMENTS

SUBMITTALS

REV	DATE	DESCRIPTION
A	11/15/2021	ISSUED FOR REVIEW
B	01/21/2022	ISSUED FOR REVIEW

A&E PROJECT NUMBER
BOBOS00592A

DISH Wireless L.L.C.
PROJECT INFORMATION
BOBOS00592A
CROWN CASTLE BU#841273
344 ROUTE 6
NORTH TRURO, MA 02652

SHEET TITLE
RF
CABLE COLOR CODE

SHEET NUMBER
RF-1

EXOTHERMIC CONNECTION

MECHANICAL CONNECTION

BUSS BAR INSULATOR

CHEMICAL ELECTROLYTIC GROUNDING SYSTEM

TEST CHEMICAL ELECTROLYTIC GROUNDING SYSTEM

EXOTHERMIC WITH INSPECTION SLEEVE

GROUNDING BAR

GROUND ROD

TEST GROUND ROD WITH INSPECTION SLEEVE

SINGLE POLE SWITCH

DUPLEX RECEPTACLE

DUPLEX GFCI RECEPTACLE

FLUORESCENT LIGHTING FIXTURE (2) TWO LAMPS 48–T8

SMOKE DETECTION (DC)

EMERGENCY LIGHTING (DC)

SECURITY LIGHT W/PHOTOCELL LITHONIA ALXW LED–1–25A400/51K–SR4–120–PE–DDBTXD

CHAIN LINK FENCE

WOOD/WROUGHT IRON FENCE

WALL STRUCTURE

LEASE AREA

PROPERTY LINE (PL)

SETBACKS

ICE BRIDGE

CABLE TRAY

WATER LINE

UNDERGROUND POWER

UNDERGROUND TELCO

OVERHEAD POWER

OVERHEAD TELCO

UNDERGROUND TELCO/POWER

ABOVE GROUND POWER

ABOVE GROUND TELCO

ABOVE GROUND TELCO/POWER

WORKPOINT

SECTION REFERENCE

DETAIL REFERENCE

LEGEND

AB	ANCHOR BOLT
ABV	ABOVE
AC	ALTERNATING CURRENT
ADDL	ADDITIONAL
AFF	ABOVE FINISHED FLOOR
AFG	ABOVE FINISHED GRADE
AGL	ABOVE GROUND LEVEL
AIC	AMPERAGE INTERRUPTION CAPACITY
ALUM	ALUMINUM
ALT	ALTERNATE
ANT	ANTENNA
APPROX	APPROXIMATE
ARCH	ARCHITECTURAL
ATS	AUTOMATIC TRANSFER SWITCH
AWG	AMERICAN WIRE GAUGE
BATT	BATTERY
BLDG	BUILDING
BLK	BLOCK
BLKG	BLOCKING
BM	BEAM
BTC	BARE TINNED COPPER CONDUCTOR
BOF	BOTTOM OF FOOTING
CAB	CABINET
CANT	CANTILEVERED
CHG	CHARGING
CLG	CEILING
CLR	CLEAR
COL	COLUMN
COMM	COMMON
CONC	CONCRETE
CONSTR	CONSTRUCTION
DBL	DOUBLE
DC	DIRECT CURRENT
DEPT	DEPARTMENT
DF	DOUGLAS FIR
DIA	DIAMETER
DIAG	DIAGONAL
DIM	DIMENSION
DWG	DRAWING
DWL	DOWEL
EA	EACH
EC	ELECTRICAL CONDUCTOR
EL.	ELEVATION
ELEC	ELECTRICAL
EMT	ELECTRICAL METALLIC TUBING
ENG	ENGINEER
EQ	EQUAL
EXP	EXPANSION
EXT	EXTERIOR
EW	EACH WAY
FAB	FABRICATION
FF	FINISH FLOOR
FG	FINISH GRADE
FIF	FACILITY INTERFACE FRAME
FIN	FINISH(ED)
FLR	FLOOR
FDN	FOUNDATION
FOC	FACE OF CONCRETE
FOM	FACE OF MASONRY
FOS	FACE OF STUD
FOW	FACE OF WALL
FS	FINISH SURFACE
FT	FOOT
FTG	FOOTING
GA	GAUGE
GEN	GENERATOR
GFCI	GROUND FAULT CIRCUIT INTERRUPTER
GLB	GLUE LAMINATED BEAM
GLV	GALVANIZED
GPS	GLOBAL POSITIONING SYSTEM
GND	GROUND
GSM	GLOBAL SYSTEM FOR MOBILE
HDG	HOT DIPPED GALVANIZED
HDR	HEADER
HGR	HANGER
HVAC	HEAT/VENTILATION/AIR CONDITIONING
HT	HEIGHT
IGR	INTERIOR GROUND RING
IN	INCH
INT	INTERIOR
LB(S)	POUND(S)
LF	LINEAR FEET
LTE	LONG TERM EVOLUTION
MAS	MASONRY
MAX	MAXIMUM
MB	MACHINE BOLT
MECH	MECHANICAL
MFR	MANUFACTURER
MGB	MASTER GROUND BAR
MIN	MINIMUM
MISC	MISCELLANEOUS
MTL	METAL
MTS	MANUAL TRANSFER SWITCH
MW	MICROWAVE
NEC	NATIONAL ELECTRIC CODE
NM	NEWTON METERS
NO.	NUMBER
#	NUMBER
NTS	NOT TO SCALE
OC	ON–CENTER
OSHA	OCCUPATIONAL SAFETY AND HEALTH ADMINISTRATION
OPNG	OPENING
P/C	PRECAST CONCRETE
PCS	PERSONAL COMMUNICATION SERVICES
PCU	PRIMARY CONTROL UNIT
PRC	PRIMARY RADIO CABINET
PP	POLARIZING PRESERVING
PSF	POUNDS PER SQUARE FOOT
PSI	POUNDS PER SQUARE INCH
PT	PRESSURE TREATED
PWR	POWER CABINET
QTY	QUANTITY
RAD	RADIUS
RECT	RECTIFIER
REF	REFERENCE
REINF	REINFORCEMENT
REQ'D	REQUIRED
RET	REMOTE ELECTRIC TILT
RF	RADIO FREQUENCY
RMC	RIGID METALLIC CONDUIT
RRH	REMOTE RADIO HEAD
RRU	REMOTE RADIO UNIT
RWY	RACEWAY
SCH	SCHEDULE
SHT	SHEET
SIAD	SMART INTEGRATED ACCESS DEVICE
SIM	SIMILAR
SPEC	SPECIFICATION
SQ	SQUARE
SS	STAINLESS STEEL
STD	STANDARD
STL	STEEL
TEMP	TEMPORARY
THK	THICKNESS
TMA	TOWER MOUNTED AMPLIFIER
TN	TOE NAIL
TOA	TOP OF ANTENNA
TOC	TOP OF CURB
TOF	TOP OF FOUNDATION
TOP	TOP OF PLATE (PARAPET)
TOS	TOP OF STEEL
TOW	TOP OF WALL
TVSS	TRANSIENT VOLTAGE SURGE SUPPRESSION
TYP	TYPICAL
UG	UNDERGROUND
UL	UNDERWRITERS LABORATORY
UNO	UNLESS NOTED OTHERWISE
UMTS	UNIVERSAL MOBILE TELECOMMUNICATIONS SYSTEM
UPS	UNITERRUPTIBLE POWER SYSTEM (DC POWER PLANT)
VIF	VERIFIED IN FIELD
W	WIDE
W/	WITH
WD	WOOD
WP	WEATHERPROOF
WT	WEIGHT

ABBREVIATIONS

dish wireless.

5701 SOUTH SANTA FE DRIVE
LITTLETON, CO 80120

HDG HUDSON Design Group LLC

45 BEECHWOOD DRIVE
N. ANDOVER, MA 01845

TEL: (978) 557-5553
FAX: (978) 336-5586

COMMONWEALTH OF MASSACHUSETTS
DANIEL P. HAMM
CIVIL
No. 40720
REGISTERED PROFESSIONAL ENGINEER

IT IS A VIOLATION OF LAW FOR ANY PERSON, UNLESS THEY ARE ACTING UNDER THE DIRECTION OF A LICENSED PROFESSIONAL ENGINEER, TO ALTER THIS DOCUMENT.

DRAWN BY:	CHECKED BY:	APPROVED BY:
PS	SMA	DPH

RFDS REV #: 0

PRELIMINARY DOCUMENTS

SUBMITTALS

REV	DATE	DESCRIPTION
A	11/15/2021	ISSUED FOR REVIEW
B	01/21/2022	ISSUED FOR REVIEW

A&E PROJECT NUMBER

BOBOS00592A

DISH Wireless L.L.C.
PROJECT INFORMATION

BOBOS00592A
CROWN CASTLE BU#841273
344 ROUTE 6
NORTH TRURO, MA 02652

SHEET TITLE

LEGEND AND ABBREVIATIONS

SHEET NUMBER

GN-1

SITE ACTIVITY REQUIREMENTS:

1. NOTICE TO PROCEED – NO WORK SHALL COMMENCE PRIOR TO CONTRACTOR RECEIVING A WRITTEN NOTICE TO PROCEED (NTP) AND THE ISSUANCE OF A PURCHASE ORDER. PRIOR TO ACCESSING/ENTERING THE SITE YOU MUST CONTACT THE DISH Wireless L.L.C. AND TOWER OWNER NOC & THE DISH Wireless L.L.C. AND TOWER OWNER CONSTRUCTION MANAGER.

2. "LOOK UP" – DISH Wireless L.L.C. AND TOWER OWNER SAFETY CLIMB REQUIREMENT:

THE INTEGRITY OF THE SAFETY CLIMB AND ALL COMPONENTS OF THE CLIMBING FACILITY SHALL BE CONSIDERED DURING ALL STAGES OF DESIGN, INSTALLATION, AND INSPECTION. TOWER MODIFICATION, MOUNT REINFORCEMENTS, AND/OR EQUIPMENT INSTALLATIONS SHALL NOT COMPROMISE THE INTEGRITY OR FUNCTIONAL USE OF THE SAFETY CLIMB OR ANY COMPONENTS OF THE CLIMBING FACILITY ON THE STRUCTURE. THIS SHALL INCLUDE, BUT NOT BE LIMITED TO: PINCHING OF THE WIRE ROPE, BENDING OF THE WIRE ROPE FROM ITS SUPPORTS, DIRECT CONTACT OR CLOSE PROXIMITY TO THE WIRE ROPE WHICH MAY CAUSE FRICTIONAL WEAR, IMPACT TO THE ANCHORAGE POINTS IN ANY WAY, OR TO IMPEDE/BLOCK ITS INTENDED USE. ANY COMPROMISED SAFETY CLIMB, INCLUDING EXISTING CONDITIONS MUST BE TAGGED OUT AND REPORTED TO YOUR DISH Wireless L.L.C. AND DISH Wireless L.L.C. AND TOWER OWNER POC OR CALL THE NOC TO GENERATE A SAFETY CLIMB MAINTENANCE AND CONTRACTOR NOTICE TICKET.

3. PRIOR TO THE START OF CONSTRUCTION, ALL REQUIRED JURISDICTIONAL PERMITS SHALL BE OBTAINED. THIS INCLUDES, BUT IS NOT LIMITED TO, BUILDING, ELECTRICAL, MECHANICAL, FIRE, FLOOD ZONE, ENVIRONMENTAL, AND ZONING. AFTER ONSITE ACTIVITIES AND CONSTRUCTION ARE COMPLETED, ALL REQUIRED PERMITS SHALL BE SATISFIED AND CLOSED OUT ACCORDING TO LOCAL JURISDICTIONAL REQUIREMENTS.

4. ALL CONSTRUCTION MEANS AND METHODS; INCLUDING BUT NOT LIMITED TO, ERECTION PLANS, RIGGING PLANS, CLIMBING PLANS, AND RESCUE PLANS SHALL BE THE RESPONSIBILITY OF THE GENERAL CONTRACTOR RESPONSIBLE FOR THE EXECUTION OF THE WORK CONTAINED HEREIN, AND SHALL MEET ANSI/ASSE A10.48 (LATEST EDITION); FEDERAL, STATE, AND LOCAL REGULATIONS; AND ANY APPLICABLE INDUSTRY CONSENSUS STANDARDS RELATED TO THE CONSTRUCTION ACTIVITIES BEING PERFORMED. ALL RIGGING PLANS SHALL ADHERE TO ANSI/ASSE A10.48 (LATEST EDITION) AND DISH Wireless L.L.C. AND TOWER OWNER STANDARDS, INCLUDING THE REQUIRED INVOLVEMENT OF A QUALIFIED ENGINEER FOR CLASS IV CONSTRUCTION, TO CERTIFY THE SUPPORTING STRUCTURE(S) IN ACCORDANCE WITH ANSI/TIA–322 (LATEST EDITION).

5. ALL SITE WORK TO COMPLY WITH DISH Wireless L.L.C. AND TOWER OWNER INSTALLATION STANDARDS FOR CONSTRUCTION ACTIVITIES ON DISH Wireless L.L.C. AND TOWER OWNER TOWER SITE AND LATEST VERSION OF ANSI/TIA–1019–A–2012 "STANDARD FOR INSTALLATION, ALTERATION, AND MAINTENANCE OF ANTENNA SUPPORTING STRUCTURES AND ANTENNAS."

6. IF THE SPECIFIED EQUIPMENT CAN NOT BE INSTALLED AS SHOWN ON THESE DRAWINGS, THE CONTRACTOR SHALL PROPOSE AN ALTERNATIVE INSTALLATION FOR APPROVAL BY DISH Wireless L.L.C. AND TOWER OWNER PRIOR TO PROCEEDING WITH ANY SUCH CHANGE OF INSTALLATION.

7. ALL MATERIALS FURNISHED AND INSTALLED SHALL BE IN STRICT ACCORDANCE WITH ALL APPLICABLE CODES, REGULATIONS AND ORDINANCES. CONTRACTOR SHALL ISSUE ALL APPROPRIATE NOTICES AND COMPLY WITH ALL LAWS, ORDINANCES, RULES, REGULATIONS AND LAWFUL ORDERS OF ANY PUBLIC AUTHORITY REGARDING THE PERFORMANCE OF THE WORK. ALL WORK CARRIED OUT SHALL COMPLY WITH ALL APPLICABLE MUNICIPAL AND UTILITY COMPANY SPECIFICATIONS AND LOCAL JURISDICTIONAL CODES, ORDINANCES AND APPLICABLE REGULATIONS.

8. THE CONTRACTOR SHALL INSTALL ALL EQUIPMENT AND MATERIALS IN ACCORDANCE WITH MANUFACTURER'S RECOMMENDATIONS UNLESS SPECIFICALLY STATED OTHERWISE.

9. THE CONTRACTOR SHALL CONTACT UTILITY LOCATING SERVICES INCLUDING PRIVATE LOCATES SERVICES PRIOR TO THE START OF CONSTRUCTION.

10. ALL EXISTING ACTIVE SEWER, WATER, GAS, ELECTRIC AND OTHER UTILITIES WHERE ENCOUNTERED IN THE WORK, SHALL BE PROTECTED AT ALL TIMES AND WHERE REQUIRED FOR THE PROPER EXECUTION OF THE WORK, SHALL BE RELOCATED AS DIRECTED BY CONTRACTOR. EXTREME CAUTION SHOULD BE USED BY THE CONTRACTOR WHEN EXCAVATING OR DRILLING PIERS AROUND OR NEAR UTILITIES. CONTRACTOR SHALL PROVIDE SAFETY TRAINING FOR THE WORKING CREW. THIS WILL INCLUDE BUT NOT BE LIMITED TO A) FALL PROTECTION B) CONFINED SPACE C) ELECTRICAL SAFETY D) TRENCHING AND EXCAVATION E) CONSTRUCTION SAFETY PROCEDURES.

11. ALL SITE WORK SHALL BE AS INDICATED ON THE STAMPED CONSTRUCTION DRAWINGS AND DISH PROJECT SPECIFICATIONS, LATEST APPROVED REVISION.

12. CONTRACTOR SHALL KEEP THE SITE FREE FROM ACCUMULATING WASTE MATERIAL, DEBRIS, AND TRASH AT THE COMPLETION OF THE WORK. IF NECESSARY, RUBBISH, STUMPS, DEBRIS, STICKS, STONES AND OTHER REFUSE SHALL BE REMOVED FROM THE SITE AND DISPOSED OF LEGALLY.

13. ALL EXISTING INACTIVE SEWER, WATER, GAS, ELECTRIC AND OTHER UTILITIES, WHICH INTERFERE WITH THE EXECUTION OF THE WORK, SHALL BE REMOVED AND/OR CAPPED, PLUGGED OR OTHERWISE DISCONTINUED AT POINTS WHICH WILL NOT INTERFERE WITH THE EXECUTION OF THE WORK, SUBJECT TO THE APPROVAL OF DISH Wireless L.L.C. AND TOWER OWNER, AND/OR LOCAL UTILITIES.

14. THE CONTRACTOR SHALL PROVIDE SITE SIGNAGE IN ACCORDANCE WITH THE TECHNICAL SPECIFICATION FOR SITE SIGNAGE REQUIRED BY LOCAL JURISDICTION AND SIGNAGE REQUIRED ON INDIVIDUAL PIECES OF EQUIPMENT, ROOMS, AND SHELTERS.

15. THE SITE SHALL BE GRADED TO CAUSE SURFACE WATER TO FLOW AWAY FROM THE CARRIER'S EQUIPMENT AND TOWER AREAS.

16. THE SUB GRADE SHALL BE COMPACTED AND BROUGHT TO A SMOOTH UNIFORM GRADE PRIOR TO FINISHED SURFACE APPLICATION.

17. THE AREAS OF THE OWNERS PROPERTY DISTURBED BY THE WORK AND NOT COVERED BY THE TOWER, EQUIPMENT OR DRIVEWAY, SHALL BE GRADED TO A UNIFORM SLOPE, AND STABILIZED TO PREVENT EROSION AS SPECIFIED ON THE CONSTRUCTION DRAWINGS AND/OR PROJECT SPECIFICATIONS.

18. CONTRACTOR SHALL MINIMIZE DISTURBANCE TO EXISTING SITE DURING CONSTRUCTION. EROSION CONTROL MEASURES, IF REQUIRED DURING CONSTRUCTION, SHALL BE IN CONFORMANCE WITH THE LOCAL GUIDELINES FOR EROSION AND SEDIMENT CONTROL.

19. THE CONTRACTOR SHALL PROTECT EXISTING IMPROVEMENTS, PAVEMENTS, CURBS, LANDSCAPING AND STRUCTURES. ANY DAMAGED PART SHALL BE REPAIRED AT CONTRACTOR'S EXPENSE TO THE SATISFACTION OF OWNER.

20. CONTRACTOR SHALL LEGALLY AND PROPERLY DISPOSE OF ALL SCRAP MATERIALS SUCH AS COAXIAL CABLES AND OTHER ITEMS REMOVED FROM THE EXISTING FACILITY. ANTENNAS AND RADIOS REMOVED SHALL BE RETURNED TO THE OWNER'S DESIGNATED LOCATION.

21. CONTRACTOR SHALL LEAVE PREMISES IN CLEAN CONDITION. TRASH AND DEBRIS SHOULD BE REMOVED FROM SITE ON A DAILY BASIS.

22. NO FILL OR EMBANKMENT MATERIAL SHALL BE PLACED ON FROZEN GROUND. FROZEN MATERIALS, SNOW OR ICE SHALL NOT BE PLACED IN ANY FILL OR EMBANKMENT.

GENERAL NOTES:

1.FOR THE PURPOSE OF CONSTRUCTION DRAWING, THE FOLLOWING DEFINITIONS SHALL APPLY:

CONTRACTOR:GENERAL CONTRACTOR RESPONSIBLE FOR CONSTRUCTION

CARRIER:DISH Wireless L.L.C.

TOWER OWNER:TOWER OWNER

2. THESE DRAWINGS HAVE BEEN PREPARED USING STANDARDS OF PROFESSIONAL CARE AND COMPLETENESS NORMALLY EXERCISED UNDER SIMILAR CIRCUMSTANCES BY REPUTABLE ENGINEERS IN THIS OR SIMILAR LOCALITIES. IT IS ASSUMED THAT THE WORK DEPICTED WILL BE PERFORMED BY AN EXPERIENCED CONTRACTOR AND/OR WORKPEOPLE WHO HAVE A WORKING KNOWLEDGE OF THE APPLICABLE CODE STANDARDS AND REQUIREMENTS AND OF INDUSTRY ACCEPTED STANDARD GOOD PRACTICE. AS NOT EVERY CONDITION OR ELEMENT IS (OR CAN BE) EXPLICITLY SHOWN ON THESE DRAWINGS, THE CONTRACTOR SHALL USE INDUSTRY ACCEPTED STANDARD GOOD PRACTICE FOR MISCELLANEOUS WORK NOT EXPLICITLY SHOWN.

3. THESE DRAWINGS REPRESENT THE FINISHED STRUCTURE. THEY DO NOT INDICATE THE MEANS OR METHODS OF CONSTRUCTION. THE CONTRACTOR SHALL BE SOLELY RESPONSIBLE FOR THE CONSTRUCTION MEANS, METHODS, TECHNIQUES, SEQUENCES, AND PROCEDURES. THE CONTRACTOR SHALL PROVIDE ALL MEASURES NECESSARY FOR PROTECTION OF LIFE AND PROPERTY DURING CONSTRUCTION. SUCH MEASURES SHALL INCLUDE, BUT NOT BE LIMITED TO, BRACING, FORMWORK, SHORING, ETC. SITE VISITS BY THE ENGINEER OR HIS REPRESENTATIVE WILL NOT INCLUDE INSPECTION OF THESE ITEMS AND IS FOR STRUCTURAL OBSERVATION OF THE FINISHED STRUCTURE ONLY.

4. NOTES AND DETAILS IN THE CONSTRUCTION DRAWINGS SHALL TAKE PRECEDENCE OVER GENERAL NOTES AND TYPICAL DETAILS. WHERE NO DETAILS ARE SHOWN, CONSTRUCTION SHALL CONFORM TO SIMILAR WORK ON THE PROJECT, AND/OR AS PROVIDED FOR IN THE CONTRACT DOCUMENTS. WHERE DISCREPANCIES OCCUR BETWEEN PLANS, DETAILS, GENERAL NOTES, AND SPECIFICATIONS, THE GREATER, MORE STRICT REQUIREMENTS, SHALL GOVERN. IF FURTHER CLARIFICATION IS REQUIRED CONTACT THE ENGINEER OF RECORD.

5. SUBSTANTIAL EFFORT HAS BEEN MADE TO PROVIDE ACCURATE DIMENSIONS AND MEASUREMENTS ON THE DRAWINGS TO ASSIST IN THE FABRICATION AND/OR PLACEMENT OF CONSTRUCTION ELEMENTS BUT IT IS THE SOLE RESPONSIBILITY OF THE CONTRACTOR TO FIELD VERIFY THE DIMENSIONS, MEASUREMENTS, AND/OR CLEARANCES SHOWN IN THE CONSTRUCTION DRAWINGS PRIOR TO FABRICATION OR CUTTING OF ANY NEW OR EXISTING CONSTRUCTION ELEMENTS. IF IT IS DETERMINED THAT THERE ARE DISCREPANCIES AND/OR CONFLICTS WITH THE CONSTRUCTION DRAWINGS THE ENGINEER OF RECORD IS TO BE NOTIFIED AS SOON AS POSSIBLE.

6. PRIOR TO THE SUBMISSION OF BIDS, THE BIDDING CONTRACTOR SHALL VISIT THE CELL SITE TO FAMILIARIZE WITH THE EXISTING CONDITIONS AND TO CONFIRM THAT THE WORK CAN BE ACCOMPLISHED AS SHOWN ON THE CONSTRUCTION DRAWINGS. ANY DISCREPANCY FOUND SHALL BE BROUGHT TO THE ATTENTION OF CARRIER POC AND TOWER OWNER.

7. ALL MATERIALS FURNISHED AND INSTALLED SHALL BE IN STRICT ACCORDANCE WITH ALL APPLICABLE CODES, REGULATIONS AND ORDINANCES. CONTRACTOR SHALL ISSUE ALL APPROPRIATE NOTICES AND COMPLY WITH ALL LAWS, ORDINANCES, RULES, REGULATIONS AND LAWFUL ORDERS OF ANY PUBLIC AUTHORITY REGARDING THE PERFORMANCE OF THE WORK. ALL WORK CARRIED OUT SHALL COMPLY WITH ALL APPLICABLE MUNICIPAL AND UTILITY COMPANY SPECIFICATIONS AND LOCAL JURISDICTIONAL CODES, ORDINANCES AND APPLICABLE REGULATIONS.

8. UNLESS NOTED OTHERWISE, THE WORK SHALL INCLUDE FURNISHING MATERIALS, EQUIPMENT, APPURTENANCES AND LABOR NECESSARY TO COMPLETE ALL INSTALLATIONS AS INDICATED ON THE DRAWINGS.

9. THE CONTRACTOR SHALL INSTALL ALL EQUIPMENT AND MATERIALS IN ACCORDANCE WITH MANUFACTURER'S RECOMMENDATIONS UNLESS SPECIFICALLY STATED OTHERWISE.

10. IF THE SPECIFIED EQUIPMENT CAN NOT BE INSTALLED AS SHOWN ON THESE DRAWINGS, THE CONTRACTOR SHALL PROPOSE AN ALTERNATIVE INSTALLATION FOR APPROVAL BY THE CARRIER AND TOWER OWNER PRIOR TO PROCEEDING WITH ANY SUCH CHANGE OF INSTALLATION.

11. CONTRACTOR IS TO PERFORM A SITE INVESTIGATION, BEFORE SUBMITTING BIDS, TO DETERMINE THE BEST ROUTING OF ALL CONDUITS FOR POWER, AND TELCO AND FOR GROUNDING CABLES AS SHOWN IN THE POWER, TELCO, AND GROUNDING PLAN DRAWINGS.

12. THE CONTRACTOR SHALL PROTECT EXISTING IMPROVEMENTS, PAVEMENTS, CURBS, LANDSCAPING AND STRUCTURES. ANY DAMAGED PART SHALL BE REPAIRED AT CONTRACTOR'S EXPENSE TO THE SATISFACTION OF DISH Wireless L.L.C. AND TOWER OWNER

13. CONTRACTOR SHALL LEGALLY AND PROPERLY DISPOSE OF ALL SCRAP MATERIALS SUCH AS COAXIAL CABLES AND OTHER ITEMS REMOVED FROM THE EXISTING FACILITY. ANTENNAS REMOVED SHALL BE RETURNED TO THE OWNER'S DESIGNATED LOCATION.

14. CONTRACTOR SHALL LEAVE PREMISES IN CLEAN CONDITION. TRASH AND DEBRIS SHOULD BE REMOVED FROM SITE ON A DAILY BASIS.

dish wireless.

5701 SOUTH SANTA FE DRIVE
LITTLETON, CO 80120

HDG HUDSON Design Group LLC

45 BEECHWOOD DRIVE
N. ANDOVER, MA 01845

TEL: (978) 557-5553
FAX: (978) 336-5586

COMMONWEALTH OF MASSACHUSETTS
DANIEL P. HAMM
CIVIL
No. 40720
REGISTERED PROFESSIONAL ENGINEER

IT IS A VIOLATION OF LAW FOR ANY PERSON, UNLESS THEY ARE ACTING UNDER THE DIRECTION OF A LICENSED PROFESSIONAL ENGINEER, TO ALTER THIS DOCUMENT.

DRAWN BY:	CHECKED BY:	APPROVED BY:
PS	SMA	DPH

RFDS REV #: 0

PRELIMINARY DOCUMENTS

SUBMITTALS

REV	DATE	DESCRIPTION
A	11/15/2021	ISSUED FOR REVIEW
B	01/21/2022	ISSUED FOR REVIEW

A&E PROJECT NUMBER

BOBOS00592A

DISH Wireless L.L.C.
PROJECT INFORMATION

BOBOS00592A
CROWN CASTLE BU#841273
344 ROUTE 6
NORTH TRURO, MA 02652

SHEET TITLE

GENERAL NOTES

SHEET NUMBER

GN-2

CONCRETE, FOUNDATIONS, AND REINFORCING STEEL:

1. ALL CONCRETE WORK SHALL BE IN ACCORDANCE WITH THE ACI 301, ACI 318, ACI 336, ASTM A184, ASTM A185 AND THE DESIGN AND CONSTRUCTION SPECIFICATION FOR CAST–IN–PLACE CONCRETE.

2. UNLESS NOTED OTHERWISE, SOIL BEARING PRESSURE USED FOR DESIGN OF SLABS AND FOUNDATIONS IS ASSUMED TO BE 1000 psf.

3. ALL CONCRETE SHALL HAVE A MINIMUM COMPRESSIVE STRENGTH (f'c) OF 3000 psi AT 28 DAYS, UNLESS NOTED OTHERWISE. NO MORE THAN 90 MINUTES SHALL ELAPSE FROM BATCH TIME TO TIME OF PLACEMENT UNLESS APPROVED BY THE ENGINEER OF RECORD. TEMPERATURE OF CONCRETE SHALL NOT EXCEED 90°f AT TIME OF PLACEMENT.

4. CONCRETE EXPOSED TO FREEZE–THAW CYCLES SHALL CONTAIN AIR ENTRAINING ADMIXTURES. AMOUNT OF AIR ENTRAINMENT TO BE BASED ON SIZE OF AGGREGATE AND F3 CLASS EXPOSURE (VERY SEVERE). CEMENT USED TO BE TYPE II PORTLAND CEMENT WITH A MAXIMUM WATER–TO–CEMENT RATIO (W/C) OF 0.45.

5. ALL STEEL REINFORCING SHALL CONFORM TO ASTM A615. ALL WELDED WIRE FABRIC (WWF) SHALL CONFORM TO ASTM A185. ALL SPLICES SHALL BE CLASS "B" TENSION SPLICES, UNLESS NOTED OTHERWISE. ALL HOOKS SHALL BE STANDARD 90 DEGREE HOOKS, UNLESS NOTED OTHERWISE. YIELD STRENGTH (Fy) OF STANDARD DEFORMED BARS ARE AS FOLLOWS:

#4 BARS AND SMALLER 40 ksi

#5 BARS AND LARGER 60 ksi

6. THE FOLLOWING MINIMUM CONCRETE COVER SHALL BE PROVIDED FOR REINFORCING STEEL UNLESS SHOWN OTHERWISE ON DRAWINGS:

- CONCRETE CAST AGAINST AND PERMANENTLY EXPOSED TO EARTH 3"
- CONCRETE EXPOSED TO EARTH OR WEATHER:
- #6 BARS AND LARGER 2"
- #5 BARS AND SMALLER 1–1/2"
- CONCRETE NOT EXPOSED TO EARTH OR WEATHER:
- SLAB AND WALLS 3/4"
- BEAMS AND COLUMNS 1–1/2"

7. A TOOLED EDGE OR A 3/4" CHAMFER SHALL BE PROVIDED AT ALL EXPOSED EDGES OF CONCRETE, UNLESS NOTED OTHERWISE, IN ACCORDANCE WITH ACI 301 SECTION 4.2.4.

ELECTRICAL INSTALLATION NOTES:

1. ALL ELECTRICAL WORK SHALL BE PERFORMED IN ACCORDANCE WITH THE PROJECT SPECIFICATIONS, NEC AND ALL APPLICABLE FEDERAL, STATE, AND LOCAL CODES/ORDINANCES.

2. CONDUIT ROUTINGS ARE SCHEMATIC. CONTRACTOR SHALL INSTALL CONDUITS SO THAT ACCESS TO EQUIPMENT IS NOT BLOCKED AND TRIP HAZARDS ARE ELIMINATED.

3. WIRING, RACEWAY AND SUPPORT METHODS AND MATERIALS SHALL COMPLY WITH THE REQUIREMENTS OF THE NEC.

4. ALL CIRCUITS SHALL BE SEGREGATED AND MAINTAIN MINIMUM CABLE SEPARATION AS REQUIRED BY THE NEC.

4.1. ALL EQUIPMENT SHALL BEAR THE UNDERWRITERS LABORATORIES LABEL OF APPROVAL, AND SHALL CONFORM TO REQUIREMENT OF THE NATIONAL ELECTRICAL CODE.

4.2. ALL OVERCURRENT DEVICES SHALL HAVE AN INTERRUPTING CURRENT RATING THAT SHALL BE GREATER THAN THE SHORT CIRCUIT CURRENT TO WHICH THEY ARE SUBJECTED, 22,000 AIC MINIMUM. VERIFY AVAILABLE SHORT CIRCUIT CURRENT DOES NOT EXCEED THE RATING OF ELECTRICAL EQUIPMENT IN ACCORDANCE WITH ARTICLE 110.24 NEC OR THE MOST CURRENT ADOPTED CODE PRE THE GOVERNING JURISDICTION.

5. EACH END OF EVERY POWER PHASE CONDUCTOR, GROUNDING CONDUCTOR, AND TELCO CONDUCTOR OR CABLE SHALL BE LABELED WITH COLOR–CODED INSULATION OR ELECTRICAL TAPE (3M BRAND, 1/2" PLASTIC ELECTRICAL TAPE WITH UV PROTECTION, OR EQUAL). THE IDENTIFICATION METHOD SHALL CONFORM WITH NEC AND OSHA.

6. ALL ELECTRICAL COMPONENTS SHALL BE CLEARLY LABELED WITH LAMICOID TAGS SHOWING THEIR RATED VOLTAGE, PHASE CONFIGURATION, WIRE CONFIGURATION, POWER OR AMPACITY RATING AND BRANCH CIRCUIT ID NUMBERS (i.e. PANEL BOARD AND CIRCUIT ID'S).

7. PANEL BOARDS (ID NUMBERS) SHALL BE CLEARLY LABELED WITH PLASTIC LABELS.

8. TIE WRAPS ARE NOT ALLOWED.

9. ALL POWER AND EQUIPMENT GROUND WIRING IN TUBING OR CONDUIT SHALL BE SINGLE COPPER CONDUCTOR (#14 OR LARGER) WITH TYPE THHW, THWN, THWN–2, XHHW, XHHW–2, THW, THW–2, RHW, OR RHW–2 INSULATION UNLESS OTHERWISE SPECIFIED.

10. SUPPLEMENTAL EQUIPMENT GROUND WIRING LOCATED INDOORS SHALL BE SINGLE COPPER CONDUCTOR (#6 OR LARGER) WITH TYPE THHW, THWN, THWN–2, XHHW, XHHW–2, THW, THW–2, RHW, OR RHW–2 INSULATION UNLESS OTHERWISE SPECIFIED.

11. POWER AND CONTROL WIRING IN FLEXIBLE CORD SHALL BE MULTI–CONDUCTOR, TYPE SOOW CORD (#14 OR LARGER) UNLESS OTHERWISE SPECIFIED.

12. POWER AND CONTROL WIRING FOR USE IN CABLE TRAY SHALL BE MULTI–CONDUCTOR, TYPE TC CABLE (#14 OR LARGER), WITH TYPE THHW, THWN, THWN–2, XHHW, XHHW–2, THW, THW–2, RHW, OR RHW–2 INSULATION UNLESS OTHERWISE SPECIFIED.

13. ALL POWER AND GROUNDING CONNECTIONS SHALL BE CRIMP–STYLE, COMPRESSION WIRE LUGS AND WIRE NUTS BY THOMAS AND BETTS (OR EQUAL). LUGS AND WIRE NUTS SHALL BE RATED FOR OPERATION NOT LESS THAN 75° C (90° C IF AVAILABLE).

14. RACEWAY AND CABLE TRAY SHALL BE LISTED OR LABELED FOR ELECTRICAL USE IN ACCORDANCE WITH NEMA, UL, ANSI/IEEE AND NEC.

15. ELECTRICAL METALLIC TUBING (EMT), INTERMEDIATE METAL CONDUIT (IMC), OR RIGID METAL CONDUIT (RMC) SHALL BE USED FOR EXPOSED INDOOR LOCATIONS.

16. ELECTRICAL METALLIC TUBING (EMT) OR METAL–CLAD CABLE (MC) SHALL BE USED FOR CONCEALED INDOOR LOCATIONS.

17. SCHEDULE 40 PVC UNDERGROUND ON STRAIGHTS AND SCHEDULE 80 PVC FOR ALL ELBOWS/90s AND ALL APPROVED ABOVE GRADE PVC CONDUIT.

18. LIQUID–TIGHT FLEXIBLE METALLIC CONDUIT (LIQUID–TITE FLEX) SHALL BE USED INDOORS AND OUTDOORS, WHERE VIBRATION OCCURS OR FLEXIBILITY IS NEEDED.

19. CONDUIT AND TUBING FITTINGS SHALL BE THREADED OR COMPRESSION–TYPE AND APPROVED FOR THE LOCATION USED. SET SCREW FITTINGS ARE NOT ACCEPTABLE.

20. CABINETS, BOXES AND WIRE WAYS SHALL BE LABELED FOR ELECTRICAL USE IN ACCORDANCE WITH NEMA, UL, ANSI/IEEE AND THE NEC.

21. WIREWAYS SHALL BE METAL WITH AN ENAMEL FINISH AND INCLUDE A HINGED COVER, DESIGNED TO SWING OPEN DOWNWARDS (WIREMOLD SPECMATE WIREWAY).

22. SLOTTED WIRING DUCT SHALL BE PVC AND INCLUDE COVER (PANDUIT TYPE E OR EQUAL).

23. CONDUITS SHALL BE FASTENED SECURELY IN PLACE WITH APPROVED NON–PERFORATED STRAPS AND HANGERS. EXPLOSIVE DEVICES (i.e. POWDER–ACTUATED) FOR ATTACHING HANGERS TO STRUCTURE WILL NOT BE PERMITTED. CLOSELY FOLLOW THE LINES OF THE STRUCTURE, MAINTAIN CLOSE PROXIMITY TO THE STRUCTURE AND KEEP CONDUITS IN TIGHT ENVELOPES. CHANGES IN DIRECTION TO ROUTE AROUND OBSTACLES SHALL BE MADE WITH CONDUIT OUTLET BODIES. CONDUIT SHALL BE INSTALLED IN A NEAT AND WORKMANLIKE MANNER. PARALLEL AND PERPENDICULAR TO STRUCTURE WALL AND CEILING LINES. ALL CONDUIT SHALL BE FISHED TO CLEAR OBSTRUCTIONS. ENDS OF CONDUITS SHALL BE TEMPORARILY CAPPED FLUSH TO FINISH GRADE TO PREVENT CONCRETE, PLASTER OR DIRT FROM ENTERING. CONDUITS SHALL BE RIGIDLY CLAMPED TO BOXES BY GALVANIZED MALLEABLE IRON BUSHING ON INSIDE AND GALVANIZED MALLEABLE IRON LOCKNUT ON OUTSIDE AND INSIDE.

24. EQUIPMENT CABINETS, TERMINAL BOXES, JUNCTION BOXES AND PULL BOXES SHALL BE GALVANIZED OR EPOXY–COATED SHEET STEEL. SHALL MEET OR EXCEED UL 50 AND BE RATED NEMA 1 (OR BETTER) FOR INTERIOR LOCATIONS AND NEMA 3 (OR BETTER) FOR EXTERIOR LOCATIONS.

25. METAL RECEPTACLE, SWITCH AND DEVICE BOXES SHALL BE GALVANIZED, EPOXY–COATED OR NON–CORRODING; SHALL MEET OR EXCEED UL 514A AND NEMA OS 1 AND BE RATED NEMA 1 (OR BETTER) FOR INTERIOR LOCATIONS AND WEATHER PROTECTED (WP OR BETTER) FOR EXTERIOR LOCATIONS.

26. NONMETALLIC RECEPTACLE, SWITCH AND DEVICE BOXES SHALL MEET OR EXCEED NEMA OS 2 (NEWEST REVISION) AND BE RATED NEMA 1 (OR BETTER) FOR INTERIOR LOCATIONS AND WEATHER PROTECTED (WP OR BETTER) FOR EXTERIOR LOCATIONS.

27. THE CONTRACTOR SHALL NOTIFY AND OBTAIN NECESSARY AUTHORIZATION FROM THE CARRIER AND/OR DISH Wireless L.L.C. AND TOWER OWNER BEFORE COMMENCING WORK ON THE AC POWER DISTRIBUTION PANELS.

28. THE CONTRACTOR SHALL PROVIDE NECESSARY TAGGING ON THE BREAKERS, CABLES AND DISTRIBUTION PANELS IN ACCORDANCE WITH THE APPLICABLE CODES AND STANDARDS TO SAFEGUARD LIFE AND PROPERTY.

29. INSTALL LAMICOID LABEL ON THE METER CENTER TO SHOW "DISH Wireless L.L.C.".

30. ALL EMPTY/SPARE CONDUITS THAT ARE INSTALLED ARE TO HAVE A METERED MULE TAPE PULL CORD INSTALLED.

dish wireless.

5701 SOUTH SANTA FE DRIVE
LITTLETON, CO 80120

HDG
HUDSON Design Group LLC

45 BEECHWOOD DRIVE
N. ANDOVER, MA 01845

TEL: (978) 557-5553
FAX: (978) 336-5586

COMMONWEALTH OF MASSACHUSETTS
DANIEL P. HAMM
CIVIL
No. 40720
REGISTERED PROFESSIONAL ENGINEER

IT IS A VIOLATION OF LAW FOR ANY PERSON, UNLESS THEY ARE ACTING UNDER THE DIRECTION OF A LICENSED PROFESSIONAL ENGINEER, TO ALTER THIS DOCUMENT.

DRAWN BY:	CHECKED BY:	APPROVED BY:
PS	SMA	DPH

RFDS REV #: 0

PRELIMINARY DOCUMENTS

SUBMITTALS

REV	DATE	DESCRIPTION
A	11/15/2021	ISSUED FOR REVIEW
B	01/21/2022	ISSUED FOR REVIEW

A&E PROJECT NUMBER

BOBOS00592A

DISH Wireless L.L.C.
PROJECT INFORMATION

BOBOS00592A
CROWN CASTLE BU#841273
344 ROUTE 6
NORTH TRURO, MA 02652

SHEET TITLE

GENERAL NOTES

SHEET NUMBER

GN-3

GROUNDING NOTES:

1. ALL GROUND ELECTRODE SYSTEMS (INCLUDING TELECOMMUNICATION, RADIO, LIGHTNING PROTECTION AND AC POWER GES'S) SHALL BE BONDED TOGETHER AT OR BELOW GRADE, BY TWO OR MORE COPPER BONDING CONDUCTORS IN ACCORDANCE WITH THE NEC.

2. THE CONTRACTOR SHALL PERFORM IEEE FALL-OF-POTENTIAL RESISTANCE TO EARTH TESTING (PER IEEE 1100 AND 81) FOR GROUND ELECTRODE SYSTEMS, THE CONTRACTOR SHALL FURNISH AND INSTALL SUPPLEMENTAL GROUND ELECTRODES AS NEEDED TO ACHIEVE A TEST RESULT OF 5 OHMS OR LESS.

3. THE CONTRACTOR IS RESPONSIBLE FOR PROPERLY SEQUENCING GROUNDING AND UNDERGROUND CONDUIT INSTALLATION AS TO PREVENT ANY LOSS OF CONTINUITY IN THE GROUNDING SYSTEM OR DAMAGE TO THE CONDUIT AND PROVIDE TESTING RESULTS.

4. METAL CONDUIT AND TRAY SHALL BE GROUNDED AND MADE ELECTRICALLY CONTINUOUS WITH LISTED BONDING FITTINGS OR BY BONDING ACROSS THE DISCONTINUITY WITH #6 COPPER WIRE UL APPROVED GROUNDING TYPE CONDUIT CLAMPS.

5. METAL RACEWAY SHALL NOT BE USED AS THE NEC REQUIRED EQUIPMENT GROUND CONDUCTOR. STRANDED COPPER CONDUCTORS WITH GREEN INSULATION, SIZED IN ACCORDANCE WITH THE NEC, SHALL BE FURNISHED AND INSTALLED WITH THE POWER CIRCUITS TO BTS EQUIPMENT.

6. EACH CABINET FRAME SHALL BE DIRECTLY CONNECTED TO THE MASTER GROUND BAR WITH GREEN INSULATED SUPPLEMENTAL EQUIPMENT GROUND WIRES, #6 STRANDED COPPER OR LARGER FOR INDOOR BTS; #2 BARE SOLID TINNED COPPER FOR OUTDOOR BTS.

7. CONNECTIONS TO THE GROUND BUS SHALL NOT BE DOUBLED UP OR STACKED BACK TO BACK CONNECTIONS ON OPPOSITE SIDE OF THE GROUND BUS ARE PERMITTED.

8. ALL EXTERIOR GROUND CONDUCTORS BETWEEN EQUIPMENT/GROUND BARS AND THE GROUND RING SHALL BE #2 SOLID TINNED COPPER UNLESS OTHERWISE INDICATED.

9. ALUMINUM CONDUCTOR OR COPPER CLAD STEEL CONDUCTOR SHALL NOT BE USED FOR GROUNDING CONNECTIONS.

10. USE OF 90° BENDS IN THE PROTECTION GROUNDING CONDUCTORS SHALL BE AVOIDED WHEN 45° BENDS CAN BE ADEQUATELY SUPPORTED.

11. EXOTHERMIC WELDS SHALL BE USED FOR ALL GROUNDING CONNECTIONS BELOW GRADE.

12. ALL GROUND CONNECTIONS ABOVE GRADE (INTERIOR AND EXTERIOR) SHALL BE FORMED USING HIGH PRESS CRIMPS.

13. COMPRESSION GROUND CONNECTIONS MAY BE REPLACED BY EXOTHERMIC WELD CONNECTIONS.

14. ICE BRIDGE BONDING CONDUCTORS SHALL BE EXOTHERMICALLY BONDED OR BOLTED TO THE BRIDGE AND THE TOWER GROUND BAR.

15. APPROVED ANTIOXIDANT COATINGS (i.e. CONDUCTIVE GEL OR PASTE) SHALL BE USED ON ALL COMPRESSION AND BOLTED GROUND CONNECTIONS.

16. ALL EXTERIOR GROUND CONNECTIONS SHALL BE COATED WITH A CORROSION RESISTANT MATERIAL.

17. MISCELLANEOUS ELECTRICAL AND NON-ELECTRICAL METAL BOXES, FRAMES AND SUPPORTS SHALL BE BONDED TO THE GROUND RING, IN ACCORDANCE WITH THE NEC.

18. BOND ALL METALLIC OBJECTS WITHIN 6 ft OF MAIN GROUND RING WITH (1) #2 BARE SOLID TINNED COPPER GROUND CONDUCTOR.

19. GROUND CONDUCTORS USED FOR THE FACILITY GROUNDING AND LIGHTNING PROTECTION SYSTEMS SHALL NOT BE ROUTED THROUGH METALLIC OBJECTS THAT FORM A RING AROUND THE CONDUCTOR, SUCH AS METALLIC CONDUITS, METAL SUPPORT CLIPS OR SLEEVES THROUGH WALLS OR FLOORS. WHEN IT IS REQUIRED TO BE HOUSED IN CONDUIT TO MEET CODE REQUIREMENTS OR LOCAL CONDITIONS, NON-METALLIC MATERIAL SUCH AS PVC CONDUIT SHALL BE USED. WHERE USE OF METAL CONDUIT IS UNAVOIDABLE (i.e., NONMETALLIC CONDUIT PROHIBITED BY LOCAL CODE) THE GROUND CONDUCTOR SHALL BE BONDED TO EACH END OF THE METAL CONDUIT.

20. ALL GROUNDS THAT TRANSITION FROM BELOW GRADE TO ABOVE GRADE MUST BE #2 BARE SOLID TINNED COPPER IN 3/4" NON-METALLIC, FLEXIBLE CONDUIT FROM 24" BELOW GRADE TO WITHIN 3" TO 6" OF CAD-WELD TERMINATION POINT. THE EXPOSED END OF THE CONDUIT MUST BE SEALED WITH SILICONE CAULK. (ADD TRANSITIONING GROUND STANDARD DETAIL AS WELL).

21. BUILDINGS WHERE THE MAIN GROUNDING CONDUCTORS ARE REQUIRED TO BE ROUTED TO GRADE, THE CONTRACTOR SHALL ROUTE TWO GROUNDING CONDUCTORS FROM THE ROOFTOP, TOWERS, AND WATER TOWERS GROUNDING RING, TO THE EXISTING GROUNDING SYSTEM, THE GROUNDING CONDUCTORS SHALL NOT BE SMALLER THAN 2/0 COPPER. ROOFTOP GROUNDING RING SHALL BE BONDED TO THE EXISTING GROUNDING SYSTEM, THE BUILDING STEEL COLUMNS, LIGHTNING PROTECTION SYSTEM, AND BUILDING MAIN WATER LINE (FERROUS OR NONFERROUS METAL PIPING ONLY). DO NOT ATTACH GROUNDING TO FIRE SPRINKLER SYSTEM PIPES.

dish wireless.

5701 SOUTH SANTA FE DRIVE
LITTLETON, CO 80120

HDG HUDSON Design Group LLC

45 BEECHWOOD DRIVE
N. ANDOVER, MA 01845

TEL: (978) 557-5553
FAX: (978) 336-5586

COMMONWEALTH OF MASSACHUSETTS
DANIEL P. HAMM
CIVIL
No. 40720
REGISTERED PROFESSIONAL ENGINEER

IT IS A VIOLATION OF LAW FOR ANY PERSON, UNLESS THEY ARE ACTING UNDER THE DIRECTION OF A LICENSED PROFESSIONAL ENGINEER, TO ALTER THIS DOCUMENT.

DRAWN BY:	CHECKED BY:	APPROVED BY:
PS	SMA	DPH

RFDS REV #: 0

PRELIMINARY DOCUMENTS

SUBMITTALS

REV	DATE	DESCRIPTION
A	11/15/2021	ISSUED FOR REVIEW
B	01/21/2022	ISSUED FOR REVIEW

A&E PROJECT NUMBER

BOBOS00592A

DISH Wireless L.L.C.
PROJECT INFORMATION

BOBOS00592A
CROWN CASTLE BU#841273
344 ROUTE 6
NORTH TRURO, MA 02652

SHEET TITLE

GENERAL NOTES

SHEET NUMBER

GN-4

Elizabeth Sturdy

From: Katie Adams <kadams@nbcllc.com>
Sent: Monday, October 17, 2022 12:26 PM
To: Elizabeth Sturdy
Cc: Barbara Carboni
Subject: RE: Structural Analysis Report

Hi Elizabeth,

Thank you for reaching out about this! Yes, Tim Greene and I discussed the structural analysis which was run as risk 3. I reviewed the report and it includes the proposed DISH equipment, so I would like to use this report as part of DISH's application packet.

Thank you very much, and feel free to reach out with any questions.

Katie Adams
SR Site Acquisition Specialist

NETWORK BUILDING + CONSULTING
100 Apollo Drive | Suite 303 | Chelmsford, MA | 01824
M 781-392-7547

TOTALLY COMMITTED

TOP WORK PLACES 2021 USA

Date: **September 21, 2022**

B+T Group
1717 S, Boulder, Suite 300
Tulsa, OK 74119
(918) 587-4630

Subject:	**Structural Analysis Report**	
Carrier Designation:	**Site Number:**	4HY0568A
	Site Name:	BS13XC597
Crown Castle Designation:	**BU Number:**	841273
	Site Name:	TRURO
	JDE Job Number:	723038
	Work Order Number:	2161774
	Order Number:	623577 Rev. 1
Engineering Firm Designation:	**B+T Group Project Number:**	100736.010.01.0001
Site Data:	**344 Route 6, North Truro, Barnstable County, MA** **Latitude *42° 1' 18"*, Longitude *-70° 4' 30"*** **170 Foot - Self Support Tower**	

B+T Group is pleased to submit this **"Structural Analysis Report"** to determine the structural integrity of the above-mentioned tower.

The purpose of the analysis is to determine acceptability of the tower stress level. Based on our analysis we have determined the tower stress level for the structure and foundation, under the following load case, to be:

LC7: Proposed Equipment Configuration **Sufficient Capacity**

This analysis utilizes an ultimate 3-second gust wind speed of 149 mph as required by the 2015 International Building Code as amended by the Massachusetts State Building Code, Ninth Edition. Applicable Standard references and design criteria are listed in Section 2 - Analysis Criteria.

Structural analysis prepared by: Andrew Fisher

Respectfully submitted by: B+T Engineering, Inc.

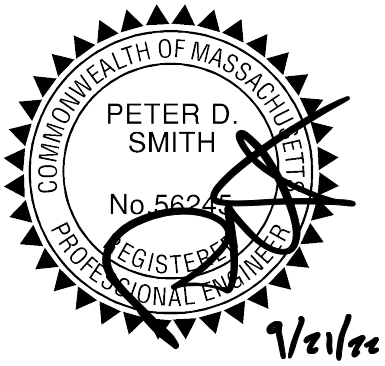

Peter Smith, P.E.

tnxTower Report - version 8.1.1.0

TABLE OF CONTENTS

1) INTRODUCTION

2) ANALYSIS CRITERIA
Table 1 - Proposed Equipment Configuration
Table 2 - Other Considered Equipment

3) ANALYSIS PROCEDURE
Table 3 - Documents Provided
3.1) Analysis Method
3.2) Assumptions

4) ANALYSIS RESULTS
Table 4 - Section Capacity (Summary)
Table 5 – Tower Component Stresses vs. Capacity – LC7
4.1) Recommendations

5) APPENDIX A
tnxTower Output

6) APPENDIX B
Base Level Drawing

7) APPENDIX C
Additional Calculations

1) INTRODUCTION

This tower is a 170 ft. Self-Support tower designed by Sabre and mapped by GPD Group.

2) ANALYSIS CRITERIA

TIA-222 Revision:	TIA-222-H
Risk Category:	III
Wind Speed:	149 mph
Exposure Category:	C
Topographic Factor:	1
Ice Thickness:	1.5 in
Wind Speed with Ice:	50 mph
Service Wind Speed:	60 mph

Table 1 - Proposed Equipment Configuration

Mounting Level (ft)	Center Line Elevation (ft)	Number of Antennas	Antenna Manufacturer	Antenna Model	Number of Feed Lines	Feed Line Size (in)
168.0	169.0	3	Ericsson	4003_840590966_TMO	3	1-5/8
		3	Ericsson	AIR 6419 B41_TMO		
		3	Ericsson	RADIO 4460 B2/B25 B66_TMO		
		3	Ericsson	Radio 4480_TMOV2		
		3	Rfs Celwave	APXVLL19P_43-C-A20_TMO		
	168.0	3	Site Pro1	VFA12-HD Mount		
71.0	73.0	1	Pctel	GPS-TMG-HR-26N	1	1/2
	71.0	1	--	Side Arm Mount [SO 601-1]		

Table 2 - Other Considered Equipment

Mounting Level (ft)	Center Line Elevation (ft)	Number of Antennas	Antenna Manufacturer	Antenna Model	Number of Feed Lines	Feed Line Size (in)
170.0	174.0	1	Decibel	DB806-XC	1	1/2
160.0	162.0	1	Shively Labs	6813-2 HW	1	1-5/8
	160.0	1	--	Side Arm Mount [SO 305-1]		
151.0	151.0	4	Powerwave Tech.	P65.15.XL.0	2	1-1/4
		2	--	Sector Mount [SM 602-1]		
145.0	145.0	6	Ericsson	RRUS 11	12 4 2	1-5/8 5/8 3/8
		3	Ericsson	RRUS 32		
		3	Ericsson	RRUS 32 B66		
		6	Kaelus	DBC0061F1V51-2		
		3	Kathrein	800 10122		
		12	Kathrein	860 10025		
		3	Kmw Comm.	AM-X-CD-16-65-00T-RET		
		6	Powerwave Tech.	LGP21401		
		3	Quintel Tech.	QS66512-2		
		2	Raycap	DC6-48-60-18-8F		
		1	--	Sector Mount [SM 702-3]		

Mounting Level (ft)	Center Line Elevation (ft)	Number of Antennas	Antenna Manufacturer	Antenna Model	Number of Feed Lines	Feed Line Size (in)
139.0	139.0	1	--	Pipe Mount [PM 601-1]	1	EW52
	138.0	1	Andrew	PAR6-59A		
130.0	131.0	3	Alcatel Lucent	RRH2X60-AWS	19	1-5/8
		3	Commscope	HBXX-6516DS-A2M		
		3	Commscope	LNX-6514DS-A1M		
		3	Commscope	SBNHH-1D65B		
		2	CSS	X7C-665-2		
		1	CSS	X7C-680-2		
		2	Rfs Celwave	DB-B1-6C-12AB-0Z		
	130.0	1	--	Sector Mount [SM 702-3]		
122.0	122.0	1	--	Commscope MTC3975083 (3)	1	1-1/2
		3	Fujitsu	TA08025-B604		
		3	Fujitsu	TA08025-B605		
		3	Jma Wireless	MX08FRO665-21		
		1	Raycap	RDIDC-9181-PF-48		
104.0	117.0	1	Rfs Celwave	PD220-5	10 8	7/8 3/8
	116.0	1	Telewave	ANT150F6		
	114.0	1	Sinclair	SRL-210C-4		
	113.0	1	Decibel	DB540K-F		
	112.0	2	Rfs Celwave	AO8610-5T0		
	107.0	1	Kathrein	K751221		
	106.0	2	Commscope	VHLPX4-11W-6WH		
		1	Rfs Celwave	10191		
		1	Telewave	ANT150F2		
	104.0	1	--	Sabre 30' Specialty Platform		
96.0	97.0	3	Ericsson	ERICSSON AIR 21 B4A B2P	3 6 2	1-1/4 7/8 3/8
		3	Ericsson	RADIO 4449 B12/B71		
		3	Ericsson	RRUS 11 B2		
		3	Rfs Celwave	APXVAARR24_43-U-NA20		
		3	Rfs Celwave	ATM1900D-1A20		
	96.0	1	--	Sector Mount [SM 403-3]		
87.0	87.0	1	Scala	PR-950	1	1/2
		1	--	Side Arm Mount [SO 201-1]		

3) ANALYSIS PROCEDURE

Table 3 - Documents Provided

Document	Reference	Source
Tower Manufacturer Drawing	4287353	CCI Sites
Foundation Drawing	4468581	CCI Sites
Geotech Report	4287355	CCI Sites
Crown CAD Package	Date: 06/28/2022	CCI Sites

3.1) Analysis Method

tnxTower (version 8.1.1.0), a commercially available analysis software package, was used to create a three-dimensional model of the tower and calculate member stresses for various loading cases. Selected output from the analysis is included in Appendix A. When applicable, Crown Castle has calculated and provided the effective area for panel antennas using approved methods following the intent of the TIA-222 standard.

3.2) Assumptions

1) The tower and structures were maintained in accordance with the - TIA-222 standard.
2) The configuration of antennas, transmission cables, mounts and other appurtenances are as specified in Tables 1 and 2 and the referenced drawings.

This analysis may be affected if any assumptions are not valid or have been made in error. B+T Group should be notified to determine the effect on the structural integrity of the tower.

4) ANALYSIS RESULTS

Table 4 - Section Capacity (Summary)

Section No.	Elevation (ft)	Component Type	Size	Critical Element	P (K)	SF*P_allow (K)	% Capacity	Pass / Fail
T1	170 - 160	Leg	Sabre 3.5" x 0.216"	1	-7.736	86.635	8.9	Pass
T2	160 - 140	Leg	Sabre 4.5" x 0.438"	19	-40.935	210.881	19.4	Pass
T3	140 - 120	Leg	Sabre 6.625" x 0.432"	40	-95.003	360.255	26.4	Pass
T4	120 - 100	Leg	Sabre 8.625" x 0.5"	62	-160.765	569.808	28.2	Pass
T5	100 - 80	Leg	Sabre 10.750" x 0.500"	83	-231.538	702.092	33.0	Pass
T6	80 - 60	Leg	Sabre 12.75" x 0.5"	99	-310.146	859.488	36.1	Pass
T7	60 - 40	Leg	Sabre 16" x 0.5"	114	-389.310	1110.690	35.1	Pass
T8	40 - 20	Leg	Sabre 18" x 0.5"	129	-467.770	1263.528	37.0	Pass
T9	20 - 0	Leg	Sabre 18" x 0.5"	144	-523.334	1289.925	40.6	Pass
T1	170 - 160	Diagonal	L2x2x3/8	12	-3.354	18.112	18.5	Pass
T2	160 - 140	Diagonal	L3x3x3/8	22	-8.889	40.506	21.9	Pass
T3	140 - 120	Diagonal	L3 1/2x3 1/2x3/8	44	-12.897	51.321	25.1	Pass
T4	120 - 100	Diagonal	L3 1/2x3 1/2x1/2	68	-15.693	53.678	29.2	Pass
T5	100 - 80	Diagonal	L5x5x1/2	89	-21.079	105.471	20.0	Pass
T6	80 - 60	Diagonal	L5x5x5/8	104	-22.481	116.354	19.3	Pass
T7	60 - 40	Diagonal	L5x5x5/8	119	-24.079	101.338	23.8	Pass
T8	40 - 20	Diagonal	L5x5x5/8	134	-26.567	87.432	30.4	Pass
T9	20 - 0	Diagonal	L5x5x5/8	160	-34.851	123.179	28.3	Pass
T9	20 - 0	Horizontal	2L3 1/2x3 1/2x1/4x3/8	159	-25.174	40.214	62.6	Pass
T1	170 - 160	Top Girt	L2 1/2x2 1/2x3/16	4	-0.291	8.385	3.5	Pass
T9	20 - 0	Redund Horz 1 Bracing	L3x3x5/16	157	-9.076	43.079	21.1	Pass
T9	20 - 0	Redund Diag 1 Bracing	L3x3x1/4	158	-5.764	23.979	24.0	Pass
T9	20 - 0	Inner Bracing	L3x3x3/16	166	-0.033	5.612	0.8	Pass
							Summary	
						Leg (T9)	40.6	Pass
						Diagonal (T8)	30.4	Pass

Section No.	Elevation (ft)	Component Type	Size	Critical Element	P (K)	SF*P_allow (K)	% Capacity	Pass / Fail
						Horizontal (T9)	62.6	Pass
						Top Girt (T1)	3.5	Pass
						Redund Horz 1 Bracing (T9)	21.1	Pass
						Redund Diag 1 Bracing (T9)	24.0	Pass
						Inner Bracing (T9)	0.8	Pass
						Bolt Checks	76.5	Pass
						Rating =	76.5	Pass

Table 5 - Tower Component Stresses vs. Capacity – LC7

Notes	Component	Elevation (ft)	% Capacity	Pass / Fail
1,2	Anchor Rods	Base	30.8	Pass
1,2	Base Foundation (Structure)	Base	11.9	Pass
1,2	Base Foundation (Soil Interaction)	Base	62.6	Pass

Structure Rating (max from all components) =	**76.5%**

Notes:
1) See additional documentation in "Appendix C – Additional Calculations" for calculations supporting the % capacity consumed.
2) Rating per TIA-222-H Section 15.5.

4.1) Recommendations

The tower and its foundation have sufficient capacity to carry the proposed load configuration. No modifications are required at this time.

APPENDIX A

TNXTOWER OUTPUT

Section	T1	T2	T3	T4	T5	T6	T7	T8	T9
Legs	A	Sabre 4.5" x 0.438"	Sabre 6.625" x 0.432"	Sabre 8.625" x 0.5"	Sabre 10.750" x 0.500"	Sabre 12.75" x 0.5"	Sabre 16" x 0.5"	Sabre 18" x 0.5"	
Leg Grade					A572-50				
Diagonals	L2x2x3/8	L3x3x3/8	L3 1/2x3 1/2x3/8	L3 1/2x3 1/2x1/2	L5x5x1/2		L5x5x5/8		
Diagonal Grade					A36				
Top Girts	B				N.A.				
Horizontals					N.A.				2L3 1/2x3 1/2x1/4x3/8
Red. Horizontals					N.A.				L3x3x5/16
Red. Diagonals					N.A.				L3x3x1/4
Inner Bracing					N.A.				L3x3x3/16
Face Width (ft)	8	9	11	13	15	17	19	21	23
# Panels @ (ft)	2 @ 5	9 @ 6.66667					10 @ 10		
Weight (K)	0.9	2.8	4.0	6.0	7.3	9.3	10.8	12.0	12.8

Total Weight (K): 65.9

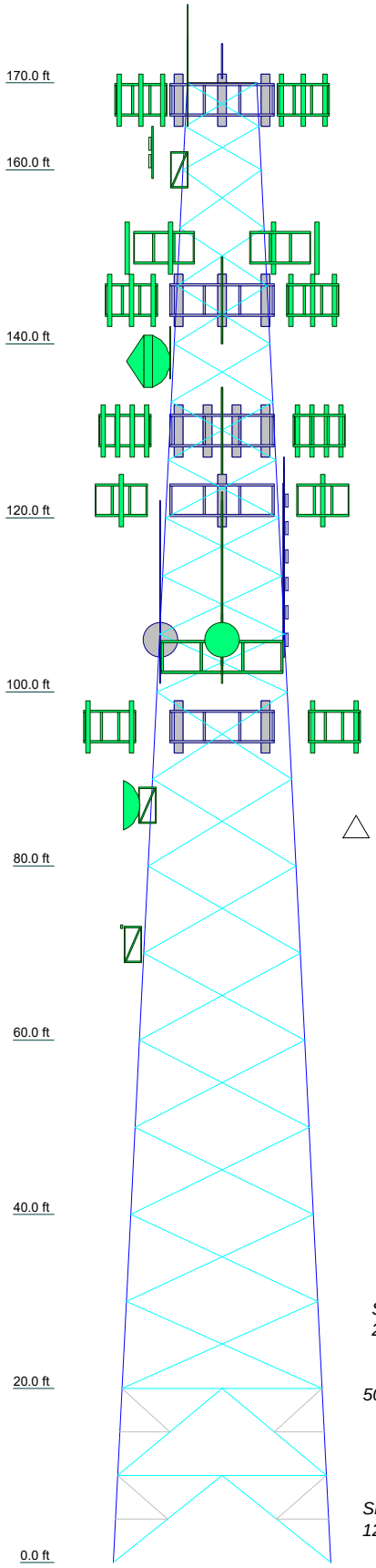

SYMBOL LIST

MARK	SIZE	MARK	SIZE
A	Sabre 3.5" x 0.216"	B	L2 1/2x2 1/2x3/16

MATERIAL STRENGTH

GRADE	Fy	Fu	GRADE	Fy	Fu
A572-50	50 ksi	65 ksi	A36	36 ksi	58 ksi

TOWER DESIGN NOTES

1. Tower is located in Barnstable County, Massachusetts.
2. Tower designed for Exposure C to the TIA-222-H Standard.
3. Tower designed for a 149 mph basic wind in accordance with the TIA-222-H Standard.
4. Tower is also designed for a 50 mph basic wind with 1.50 in ice. Ice is considered to increase in thickness with height.
5. Deflections are based upon a 60 mph wind.
6. Tower Risk Category III.
7. Topographic Category 1 with Crest Height of 0'
8. TIA-222-H Annex S
9. TOWER RATING: 76.5%

ALL REACTIONS ARE FACTORED

MAX. CORNER REACTIONS AT BASE:
DOWN: 564 K
SHEAR: 72 K

UPLIFT: -473 K
SHEAR: 63 K

AXIAL 268 K
SHEAR 25 K
MOMENT 2354 kip-ft

TORQUE 8 kip-ft
50 mph WIND - 1.500 in ICE

AXIAL 118 K
SHEAR 123 K
MOMENT 11375 kip-ft

TORQUE 75 kip-ft
REACTIONS - 149 mph WIND

B+T Group
1717 S, Boulder, Suite 300
Tulsa, OK 74119
Phone: (918) 587-4630
FAX: (918) 587-4630

Job: **100736.010.01.0001 - TRURO, MA (BU# 841273)**			
Project:			
Client: Crown Castle	Drawn by: Nithish Acharya	App'd:	
Code: TIA-222-H	Date: 09/21/22	Scale: NTS	
Path: C:\Users\IND306\Desktop\SAI\Sep 21\100736_841273_Truro------Nithish------Shivai\Trx_010_01_0001\100736_010_01_0001_TRURO_MU.eri		Dwg No. E-1	

Plot Plan
Total Area - 0.07 Acres

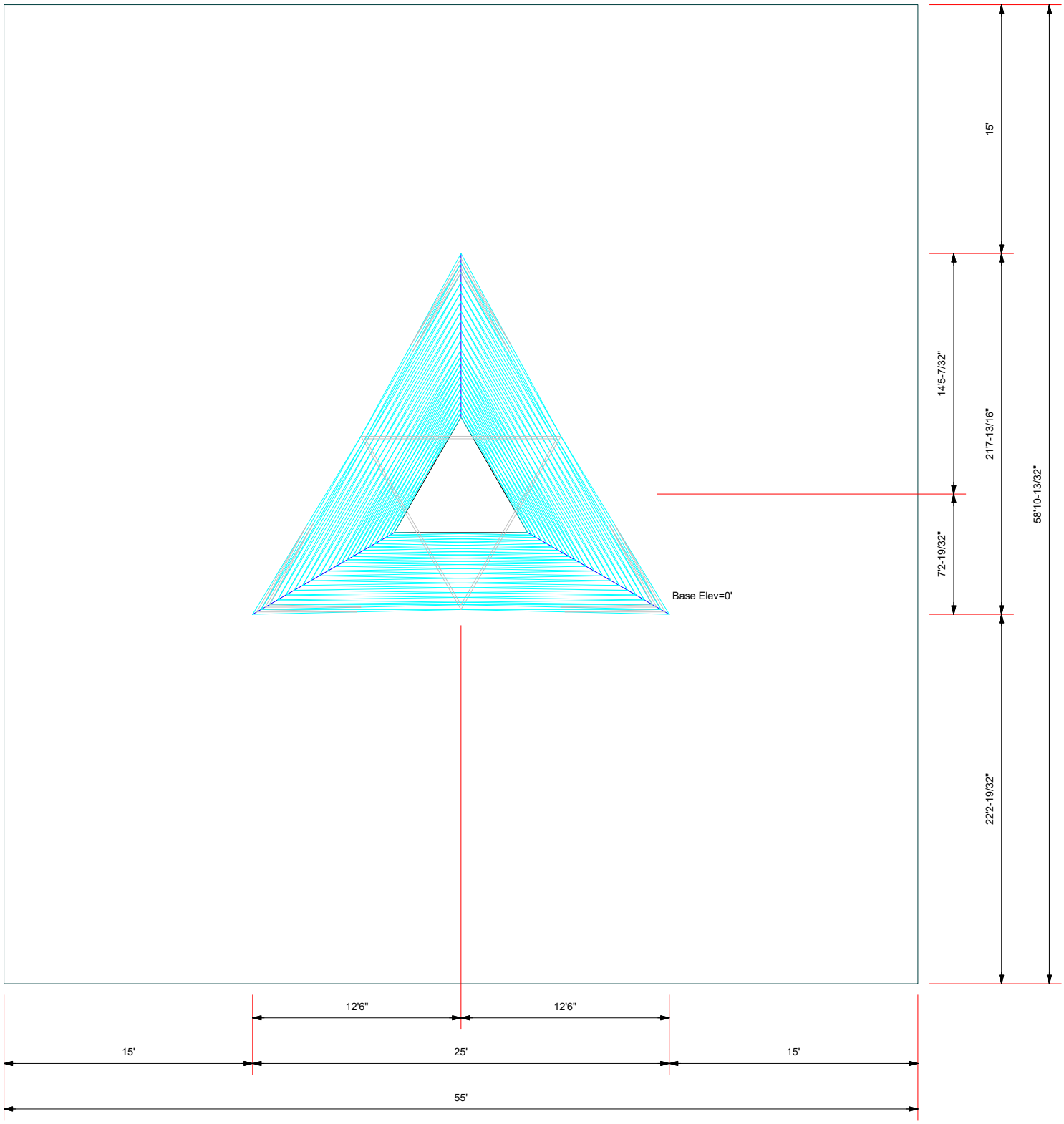

B+T Group
1717 S, Boulder, Suite 300
Tulsa, OK 74119
Phone: (918) 587-4630
FAX: (918) 587-4630

Job: ***100736.010.01.0001 - TRURO, MA (BU# 841273)***		
Project:		
Client: Crown Castle	Drawn by: Nithish Acharya	App'd:
Code: TIA-222-H	Date: 09/21/22	Scale: NTS
Path: C:\Users\IND306\Desktop\SA\Sep 21\100736_841273_Truro------Nithish------Shivai\Trx_010_01_0001\100736_010_01_0001_TRURO_MA.eri		Dwg No. E-2

TIA-222-H - 149 mph/50 mph 1.500 in Ice Exposure C

Leg Capacity ——— **Leg Compression (K)**

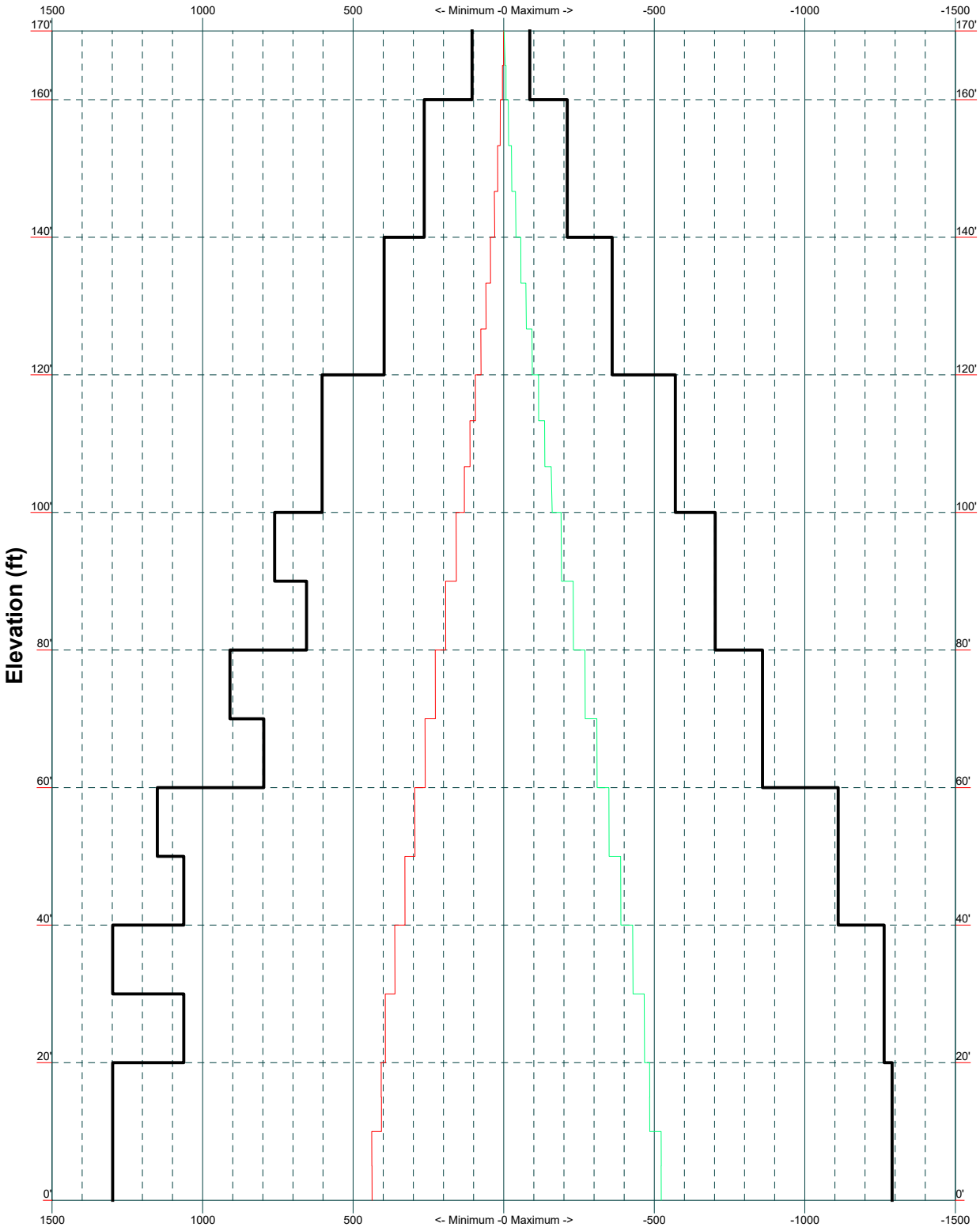

B+T Group 1717 S, Boulder, Suite 300 Tulsa, OK 74119 Phone: (918) 587-4630 FAX: (918) 587-4630	Job: ***100736.010.01.0001 - TRURO, MA (BU# 841273)***		
	Project:		
	Client: Crown Castle	Drawn by: Nithish Acharya	App'd:
	Code: TIA-222-H	Date: 09/21/22	Scale: NTS
	Path: C:\Users\IND306\Desktop\SAI\Sep 21\100736_841273_Truro------Nithish------Shivai\Trx_010_01_0001\100736_010_01_0001_TRURO_M.eri		Dwg No. E-3

TIA-222-H - 149 mph/50 mph 1.500 in Ice Exposure C

Vx Vz

Maximum Values

Mx Mz

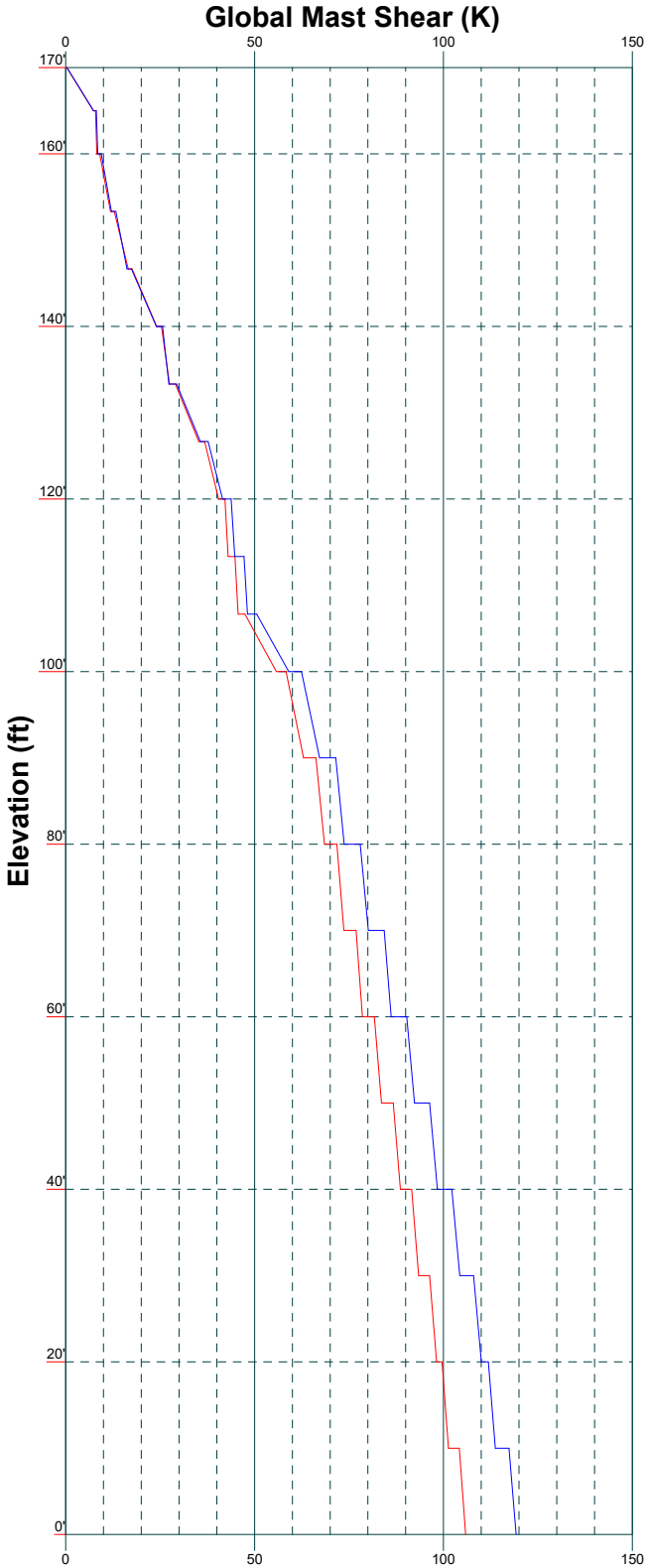

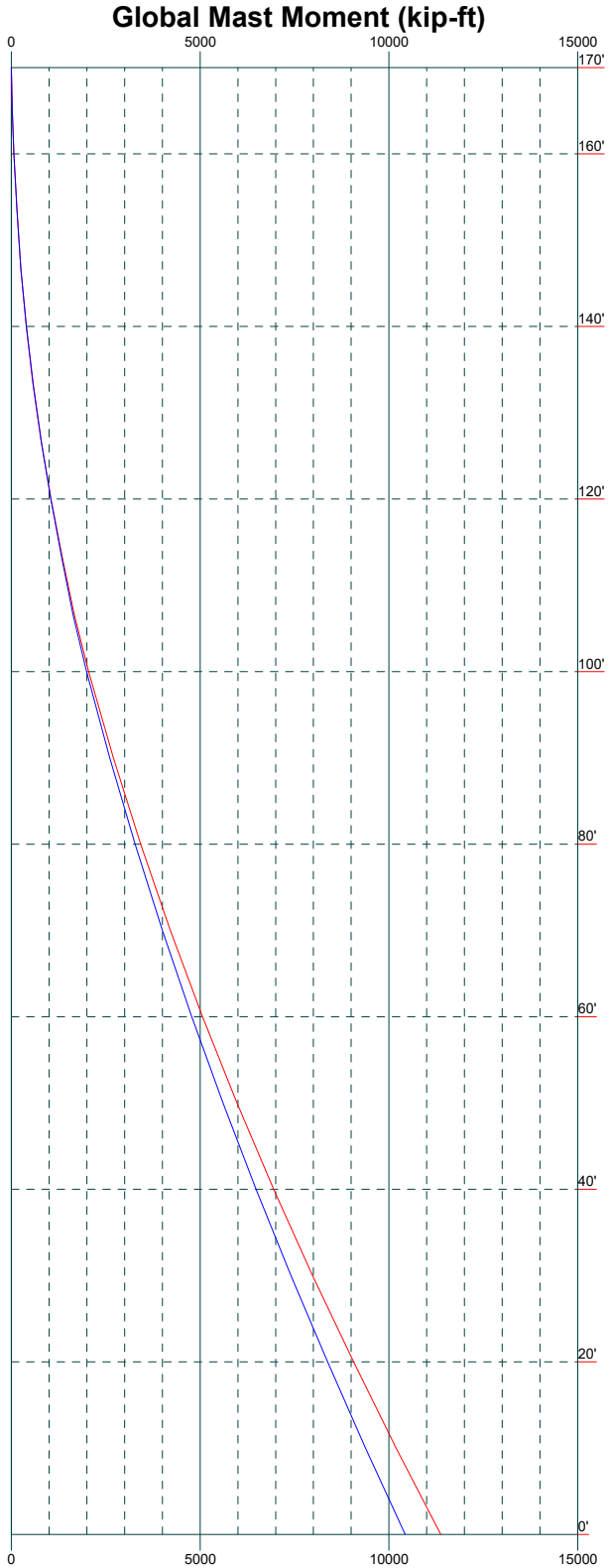

B+T Group
1717 S, Boulder, Suite 300
Tulsa, OK 74119
Phone: (918) 587-4630
FAX: (918) 587-4630

Job: 100736.010.01.0001 - TRURO, MA (BU# 841273)		
Project:		
Client: Crown Castle	Drawn by: Nithish Acharya	App'd:
Code: TIA-222-H	Date: 09/21/22	Scale: NTS
Path: C:\Users\IND306\Desktop\SAI\Sep 21\100736_841273_Truro------Nithish------Shivai\Trx_010_01_0001\100736_010_01_0001_TRURO_MA.eri		Dwg No. E-4

TIA-222-H - Service - 60 mph

Maximum Values

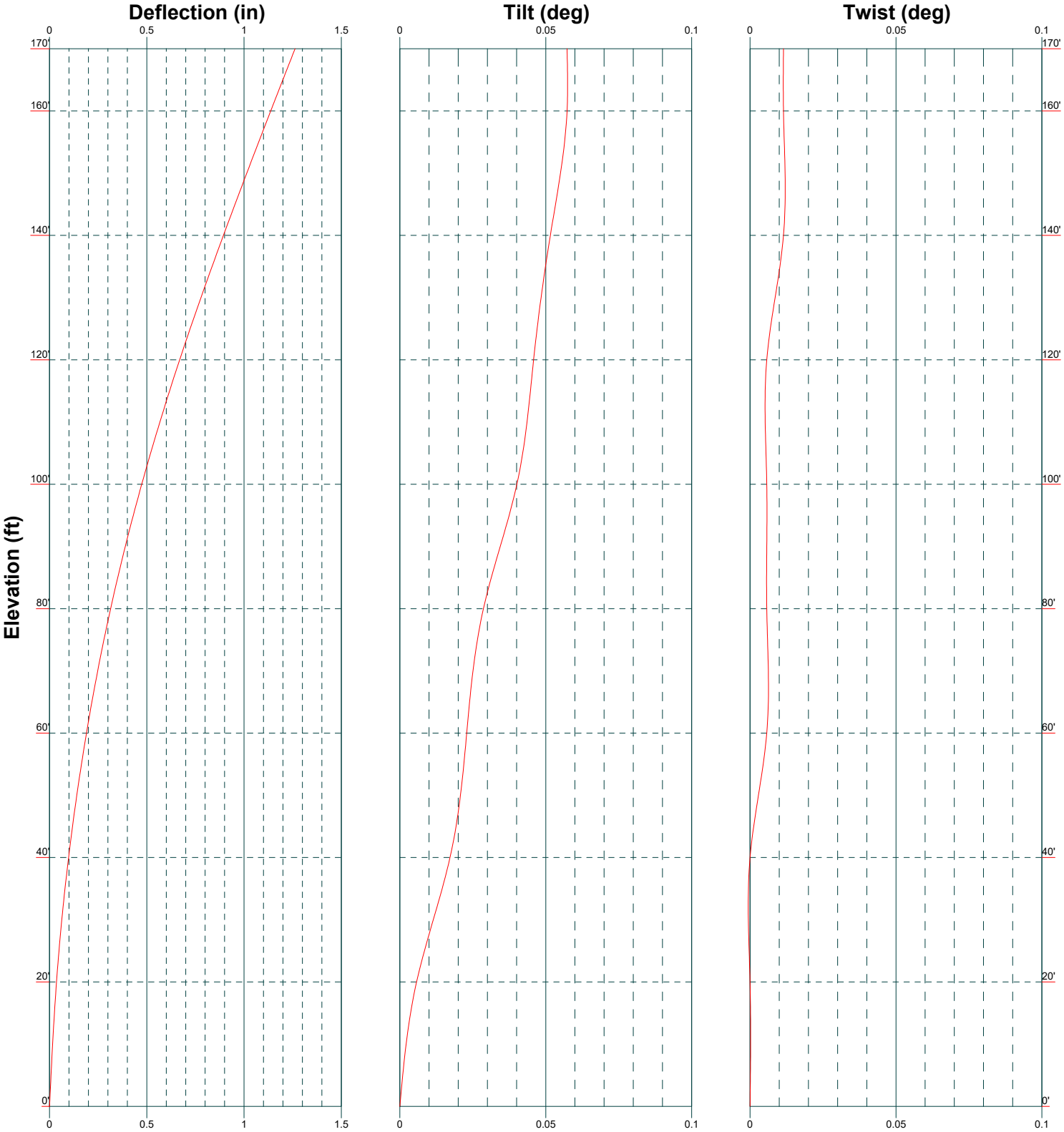

B+T Group
1717 S, Boulder, Suite 300
Tulsa, OK 74119
Phone: (918) 587-4630
FAX: (918) 587-4630

Job: ***100736.010.01.0001 - TRURO, MA (BU# 841273)***		
Project:		
Client: Crown Castle	Drawn by: Nithish Acharya	App'd:
Code: TIA-222-H	Date: 09/21/22	Scale: NTS
Path: C:\Users\IND306\Desktop\SAI\Sep 21\100736_841273_Truro------Nithish------Shivai\Trx_010_01_0001\100736_010_01_0001_TRURO_MA.eri		Dwg No. E-5

Feed Line Distribution Chart
0' - 170'

Round | Flat | App In Face | App Out Face | Truss Leg

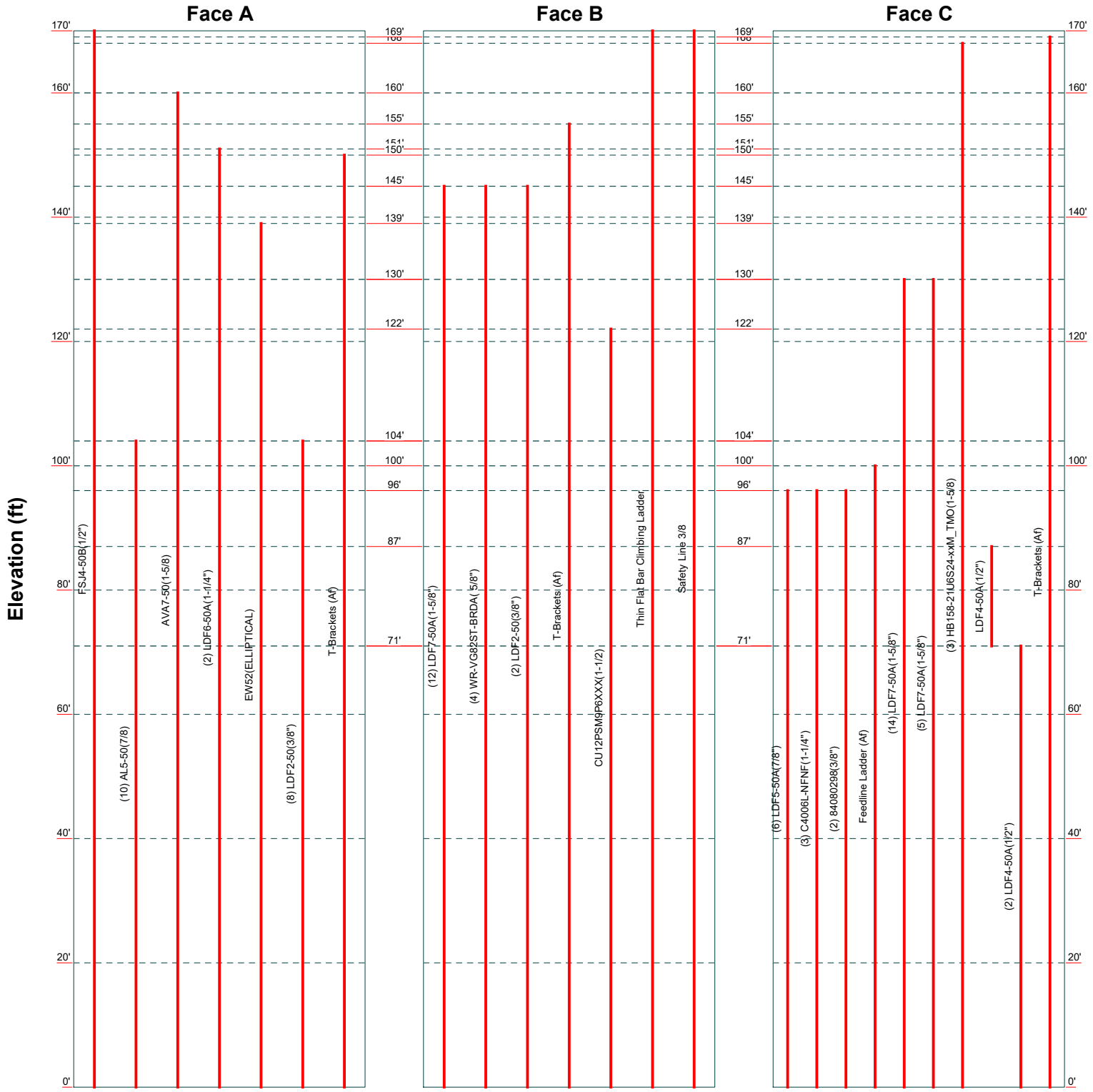

B+T Group
1717 S, Boulder, Suite 300
Tulsa, OK 74119
Phone: (918) 587-4630
FAX: (918) 587-4630

Job: 100736.010.01.0001 - TRURO, MA (BU# 841273)		
Project:		
Client: Crown Castle	Drawn by: Nithish Acharya	App'd:
Code: TIA-222-H	Date: 09/21/22	Scale: NTS
Path: C:\Users\IND306\Desktop\SAI\Sep 21\100736_841273_Truro------Nithish------Shivai\Trx_010_01_0001\100736_010_01_0001_TRURO_M.eri		Dwg No. E-7

Tower Input Data

The main tower is a 3x free standing tower with an overall height of 170' above the ground line.
The base of the tower is set at an elevation of 0' above the ground line.
The face width of the tower is 8' at the top and 25' at the base.
This tower is designed using the TIA-222-H standard.
The following design criteria apply:

Tower is located in Barnstable County, Massachusetts.
Tower base elevation above sea level: 107'.
Basic wind speed of 149 mph.
Risk Category III.
Exposure Category C.
Simplified Topographic Factor Procedure for wind speed-up calculations is used.
Topographic Category: 1.
Crest Height: 0'.
Nominal ice thickness of 1.500 in.
Ice thickness is considered to increase with height.
Ice density of 56.000 pcf.
A wind speed of 50 mph is used in combination with ice.
Temperature drop of 50.000 °F.
Deflections calculated using a wind speed of 60 mph.
TIA-222-H Annex S.
Pressures are calculated at each section.
Stress ratio used in tower member design is 1.
Tower analysis based on target reliabilities in accordance with Annex S.
Load Modification Factors used: $K_{es}(F_w) = 1.0$, $K_{es}(t_i) = 1.0$.
Maximum demand-capacity ratio is: 1.05.
Local bending stresses due to climbing loads, feed line supports, and appurtenance mounts are not considered.

Options

Consider Moments - Legs
Consider Moments - Horizontals
Consider Moments - Diagonals
Use Moment Magnification
√ Use Code Stress Ratios
√ Use Code Safety Factors - Guys
Escalate Ice
Always Use Max Kz
Use Special Wind Profile
Include Bolts In Member Capacity
Leg Bolts Are At Top Of Section
√ Secondary Horizontal Braces Leg
Use Diamond Inner Bracing (4 Sided)
SR Members Have Cut Ends
SR Members Are Concentric

Distribute Leg Loads As Uniform
Assume Legs Pinned
√ Assume Rigid Index Plate
√ Use Clear Spans For Wind Area
√ Use Clear Spans For KL/r
Retension Guys To Initial Tension
√ Bypass Mast Stability Checks
√ Use Azimuth Dish Coefficients
√ Project Wind Area of Appurt.
Autocalc Torque Arm Areas
Add IBC .6D+W Combination
√ Sort Capacity Reports By Component
Triangulate Diamond Inner Bracing
Treat Feed Line Bundles As Cylinder
Ignore KL/ry For 60 Deg. Angle Legs

Use ASCE 10 X-Brace Ly Rules
√ Calculate Redundant Bracing Forces
Ignore Redundant Members in FEA
√ SR Leg Bolts Resist Compression
All Leg Panels Have Same Allowable
Offset Girt At Foundation
√ Consider Feed Line Torque
√ Include Angle Block Shear Check
Use TIA-222-H Bracing Resist. Exemption
Use TIA-222-H Tension Splice Exemption

Poles

Include Shear-Torsion Interaction
Always Use Sub-Critical Flow
Use Top Mounted Sockets
Pole Without Linear Attachments
Pole With Shroud Or No Appurtenances
Outside and Inside Corner Radii Are Known

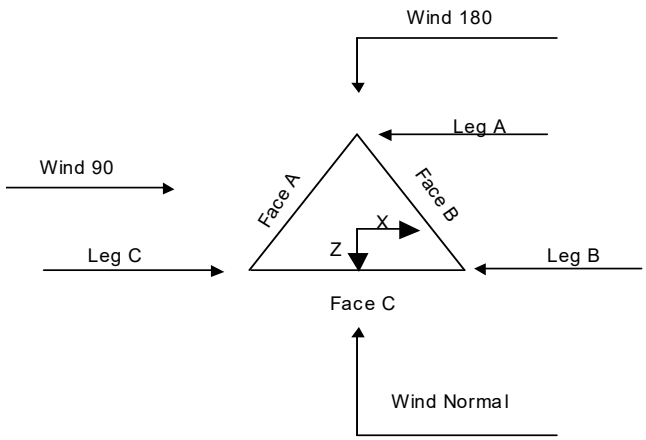

Triangular Tower

Tower Section Geometry

Tower Section	Tower Elevation ft	Assembly Database	Description	Section Width ft	Number of Sections	Section Length ft
T1	170'-160'			8'	1	10'
T2	160'-140'			9'	1	20'
T3	140'-120'			11'	1	20'
T4	120'-100'			13'	1	20'
T5	100'-80'			15'	1	20'
T6	80'-60'			17'	1	20'
T7	60'-40'			19'	1	20'
T8	40'-20'			21'	1	20'
T9	20'-0'			23'	1	20'

Tower Section Geometry *(cont'd)*

Tower Section	Tower Elevation ft	Diagonal Spacing ft	Bracing Type	Has K Brace End Panels	Has Horizontals	Top Girt Offset in	Bottom Girt Offset in
T1	170'-160'	5'	X Brace	No	No	0.000	0.000
T2	160'-140'	6'8"	X Brace	No	No	0.000	0.000
T3	140'-120'	6'8"	X Brace	No	No	0.000	0.000
T4	120'-100'	6'8"	X Brace	No	No	0.000	0.000

Tower Section	Tower Elevation ft	Diagonal Spacing ft	Bracing Type	Has K Brace End Panels	Has Horizontals	Top Girt Offset in	Bottom Girt Offset in
T5	100'-80'	10'	X Brace	No	No	0.000	0.000
T6	80'-60'	10'	X Brace	No	No	0.000	0.000
T7	60'-40'	10'	X Brace	No	No	0.000	0.000
T8	40'-20'	10'	X Brace	No	No	0.000	0.000
T9	20'-0'	10'	K1 Down	No	Yes	0.000	0.000

Tower Section Geometry *(cont'd)*

Tower Elevation ft	Leg Type	Leg Size	Leg Grade	Diagonal Type	Diagonal Size	Diagonal Grade
T1 170'-160'	Pipe	Sabre 3.5" x 0.216"	A572-50 (50 ksi)	Equal Angle	L2x2x3/8	A36 (36 ksi)
T2 160'-140'	Pipe	Sabre 4.5" x 0.438"	A572-50 (50 ksi)	Equal Angle	L3x3x3/8	A36 (36 ksi)
T3 140'-120'	Pipe	Sabre 6.625" x 0.432"	A572-50 (50 ksi)	Equal Angle	L3 1/2x3 1/2x3/8	A36 (36 ksi)
T4 120'-100'	Pipe	Sabre 8.625" x 0.5"	A572-50 (50 ksi)	Equal Angle	L3 1/2x3 1/2x1/2	A36 (36 ksi)
T5 100'-80'	Pipe	Sabre 10.750" x 0.500"	A572-50 (50 ksi)	Equal Angle	L5x5x1/2	A36 (36 ksi)
T6 80'-60'	Pipe	Sabre 12.75" x 0.5"	A572-50 (50 ksi)	Equal Angle	L5x5x5/8	A36 (36 ksi)
T7 60'-40'	Pipe	Sabre 16" x 0.5"	A572-50 (50 ksi)	Equal Angle	L5x5x5/8	A36 (36 ksi)
T8 40'-20'	Pipe	Sabre 18" x 0.5"	A572-50 (50 ksi)	Equal Angle	L5x5x5/8	A36 (36 ksi)
T9 20'-0'	Pipe	Sabre 18" x 0.5"	A572-50 (50 ksi)	Equal Angle	L5x5x5/8	A36 (36 ksi)

Tower Section Geometry *(cont'd)*

Tower Elevation ft	Top Girt Type	Top Girt Size	Top Girt Grade	Bottom Girt Type	Bottom Girt Size	Bottom Girt Grade
T1 170'-160'	Equal Angle	L2 1/2x2 1/2x3/16	A36 (36 ksi)	Equal Angle		A36 (36 ksi)

Tower Section Geometry *(cont'd)*

Tower Elevation ft	No. of Mid Girts	Mid Girt Type	Mid Girt Size	Mid Girt Grade	Horizontal Type	Horizontal Size	Horizontal Grade
T9 20'-0'	None	Flat Bar		A36 (36 ksi)	Double Equal Angle	2L3 1/2x3 1/2x1/4x3/8	A36 (36 ksi)

Tower Section Geometry *(cont'd)*

Tower Elevation ft	Secondary Horizontal Type	Secondary Horizontal Size	Secondary Horizontal Grade	Inner Bracing Type	Inner Bracing Size	Inner Bracing Grade
T9 20'-0'	Equal Angle		A36 (36 ksi)	Equal Angle	L3x3x3/16	A36 (36 ksi)

Tower Section Geometry *(cont'd)*

Tower Elevation ft	Redundant Bracing Grade		Redundant Type	Redundant Size	K Factor
T9 20'-0'	A36 (36 ksi)	Horizontal (1) Diagonal (1)	Equal Angle Equal Angle	L3x3x5/16 L3x3x1/4	1 1

Tower Section Geometry *(cont'd)*

Tower Elevation ft	Gusset Area (per face) ft^2	Gusset Thickness in	Gusset Grade	Adjust. Factor A_f	Adjust. Factor A_r	Weight Mult.	Double Angle Stitch Bolt Spacing Diagonals in	Double Angle Stitch Bolt Spacing Horizontals in	Double Angle Stitch Bolt Spacing Redundants in
T1 170'-160'	0.000	0.375	A36 (36 ksi)	1.05	1	1.05	Mid-Pt	Mid-Pt	Mid-Pt
T2 160'-140'	0.000	0.375	A36 (36 ksi)	1.05	1	1.05	Mid-Pt	Mid-Pt	Mid-Pt
T3 140'-120'	0.000	0.375	A36 (36 ksi)	1.05	1	1.05	Mid-Pt	Mid-Pt	Mid-Pt
T4 120'-100'	0.000	0.625	A36 (36 ksi)	1.05	1	1.05	Mid-Pt	Mid-Pt	Mid-Pt
T5 100'-80'	0.000	0.625	A36 (36 ksi)	1.05	1	1.05	Mid-Pt	Mid-Pt	Mid-Pt
T6 80'-60'	0.000	0.625	A36 (36 ksi)	1.05	1	1.05	Mid-Pt	Mid-Pt	Mid-Pt
T7 60'-40'	0.000	0.625	A36 (36 ksi)	1.05	1	1.05	Mid-Pt	Mid-Pt	Mid-Pt
T8 40'-20'	0.000	0.625	A36 (36 ksi)	1.05	1	1.05	Mid-Pt	Mid-Pt	Mid-Pt
T9 20'-0'	0.000	0.625	A36 (36 ksi)	1.05	1	1.05	Mid-Pt	90.450	Mid-Pt

Tower Section Geometry *(cont'd)*

K Factors[1]

Tower Elevation ft	Calc K Single Angles	Calc K Solid Rounds	Legs	X Brace Diags X Y	K Brace Diags X Y	Single Diags X Y	Girts X Y	Horiz. X Y	Sec. Horiz. X Y	Inner Brace X Y
T1 170'-160'	Yes	No	1	1	1	1	1	1	1	1
				1	1	1	1	1	1	1
T2 160'-140'	Yes	No	1	1	1	1	1	1	1	1
				1	1	1	1	1	1	1
T3 140'-120'	Yes	No	1	1	1	1	1	1	1	1
				1	1	1	1	1	1	1
T4 120'-100'	Yes	No	1	1	1	1	1	1	1	1
				1	1	1	1	1	1	1
T5 100'-80'	Yes	No	1	1	1	1	1	1	1	1
				1	1	1	1	1	1	1
T6 80'-60'	Yes	No	1	1	1	1	1	1	1	1
				1	1	1	1	1	1	1
T7 60'-40'	Yes	No	1	1	1	1	1	1	1	1
				1	1	1	1	1	1	1
T8 40'-20'	Yes	No	1	1	1	1	1	1	1	1
				1	1	1	1	1	1	1
T9 20'-0'	No	No	1	1	1	1	1	1	1	1
				1	1	1	1	1	1	1

[1]Note: K factors are applied to member segment lengths. K-braces without inner supporting members will have the K factor in the out-of-plane direction applied to the overall length.

Tower Section Geometry *(cont'd)*

Tower Elevation ft	Leg		Diagonal		Top Girt		Bottom Girt		Mid Girt		Long Horizontal		Short Horizontal	
	Net Width Deduct in	U	Net Width Deduct in	U	Net Width Deduct in	U	Net Width Deduct in	U	Net Width Deduct in	U	Net Width Deduct in	U	Net Width Deduct in	U
T1 170'-160'	0.000	1	0.000	0.75	0.000	0.75	0.000	0.75	0.000	0.75	0.000	0.75	0.000	0.75
T2 160'-140'	0.000	1	0.000	0.75	0.000	0.75	0.000	0.75	0.000	0.75	0.000	0.75	0.000	0.75
T3 140'-120'	0.000	1	0.000	0.75	0.000	0.75	0.000	0.75	0.000	0.75	0.000	0.75	0.000	0.75
T4 120'-100'	0.000	1	0.000	0.75	0.000	0.75	0.000	0.75	0.000	0.75	0.000	0.75	0.000	0.75
T5 100'-80'	0.000	1	0.000	0.75	0.000	0.75	0.000	0.75	0.000	0.75	0.000	0.75	0.000	0.75
T6 80'-60'	0.000	1	0.000	0.75	0.000	0.75	0.000	0.75	0.000	0.75	0.000	0.75	0.000	0.75
T7 60'-40'	0.000	1	0.000	0.75	0.000	0.75	0.000	0.75	0.000	0.75	0.000	0.75	0.000	0.75
T8 40'-20'	0.000	1	0.000	0.75	0.000	0.75	0.000	0.75	0.000	0.75	0.000	0.75	0.000	0.75
T9 20'-0'	0.000	1	0.000	0.75	0.000	0.75	0.000	0.75	0.000	0.75	0.000	0.75	0.000	0.75

Tower Elevation ft	Redundant Horizontal		Redundant Diagonal		Redundant Sub-Diagonal		Redundant Sub-Horizontal		Redundant Vertical		Redundant Hip		Redundant Hip Diagonal	
	Net Width Deduct in	U	Net Width Deduct in	U	Net Width Deduct in	U	Net Width Deduct in	U	Net Width Deduct in	U	Net Width Deduct in	U	Net Width Deduct in	U
T1 170'-160'	0.000	0.75	0.000	0.75	0.000	0.75	0.000	0.75	0.000	0.75	0.000	0.75	0.000	0.75
T2 160'-140'	0.000	0.75	0.000	0.75	0.000	0.75	0.000	0.75	0.000	0.75	0.000	0.75	0.000	0.75
T3 140'-120'	0.000	0.75	0.000	0.75	0.000	0.75	0.000	0.75	0.000	0.75	0.000	0.75	0.000	0.75
T4 120'-100'	0.000	0.75	0.000	0.75	0.000	0.75	0.000	0.75	0.000	0.75	0.000	0.75	0.000	0.75
T5 100'-80'	0.000	0.75	0.000	0.75	0.000	0.75	0.000	0.75	0.000	0.75	0.000	0.75	0.000	0.75
T6 80'-60'	0.000	0.75	0.000	0.75	0.000	0.75	0.000	0.75	0.000	0.75	0.000	0.75	0.000	0.75

Tower Elevation ft	Redundant Horizontal		Redundant Diagonal		Redundant Sub-Diagonal		Redundant Sub-Horizontal		Redundant Vertical		Redundant Hip		Redundant Hip Diagonal	
	Net Width Deduct in	U	Net Width Deduct in	U	Net Width Deduct in	U	Net Width Deduct in	U	Net Width Deduct in	U	Net Width Deduct in	U	Net Width Deduct in	U
T7 60'-40'	0.000	0.75	0.000	0.75	0.000	0.75	0.000	0.75	0.000	0.75	0.000	0.75	0.000	0.75
T8 40'-20'	0.000	0.75	0.000	0.75	0.000	0.75	0.000	0.75	0.000	0.75	0.000	0.75	0.000	0.75
T9 20'-0'	0.000	0.75	0.000	0.75	0.000	0.75	0.000	0.75	0.000	0.75	0.000	0.75	0.000	0.75

Tower Section Geometry *(cont'd)*

Tower Elevation ft	Leg Connection Type	Leg		Diagonal		Top Girt		Bottom Girt		Mid Girt		Long Horizontal		Short Horizontal	
		Bolt Size in	No.	Bolt Size in	No.	Bolt Size in	No.	Bolt Size in	No.	Bolt Size in	No.	Bolt Size in	No.	Bolt Size in	No.
T1 170'-160'	Flange	1.000 A325N	4	0.625 A325N	1	0.625 A325N	1	0.000 A325N	0	0.625 A325N	0	0.000 A325N	0	0.625 A325N	0
T2 160'-140'	Flange	1.250 A325N	4	0.750 A325N	1	0.000 A325N	0	0.000 A325N	0	0.625 A325N	0	0.000 A325N	0	0.625 A325N	0
T3 140'-120'	Flange	1.250 A325N	6	1.000 A325N	1	0.000 A325N	0	0.000 A325N	0	0.625 A325N	0	0.000 A325N	0	0.625 A325N	0
T4 120'-100'	Flange	1.375 A325N	6	1.000 A325N	1	0.000 A325N	0	0.000 A325N	0	0.625 A325N	0	0.000 A325N	0	0.625 A325N	0
T5 100'-80'	Flange	1.375 A325N	6	1.125 A325N	1	0.000 A325N	0	0.000 A325N	0	0.625 A325N	0	0.000 A325N	0	0.625 A325N	0
T6 80'-60'	Flange	1.500 A325N	6	1.125 A325N	1	0.000 A325N	0	0.000 A325N	0	0.625 A325N	0	0.000 A325N	0	0.625 A325N	0
T7 60'-40'	Flange	1.500 A325N	8	1.250 A325N	1	0.000 A325N	0	0.000 A325N	0	0.625 A325N	0	0.000 A325N	0	0.625 A325N	0
T8 40'-20'	Flange	1.500 A325N	8	1.250 A325N	1	0.000 A325N	0	0.000 A325N	0	0.625 A325N	0	0.000 A325N	0	0.625 A325N	0
T9 20'-0'	Flange	0.000 A36	0	1.000 A325N	2	0.000 A325N	0	0.000 A325N	0	0.625 A325N	0	1.000 A325N	2	0.625 A325N	0

Tower Section Geometry *(cont'd)*

Tower Elevation ft	Redundant Horizontal		Redundant Diagonal		Redundant Sub-Diagonal		Redundant Sub-Horizontal		Redundant Vertical		Redundant Hip		Redundant Hip Diagonal	
	Bolt Size in	No.	Bolt Size in	No.	Bolt Size in	No.	Bolt Size in	No.	Bolt Size in	No.	Bolt Size in	No.	Bolt Size in	No.
T1 170'-160'	0.625 A325N	0	0.625 A325N	0	0.625 A325N	0	0.625 A325N	0	0.625 A325N	0	0.625 A325N	0	0.625 A325N	0
T2 160'-140'	0.625 A325N	0	0.625 A325N	0	0.625 A325N	0	0.625 A325N	0	0.625 A325N	0	0.625 A325N	0	0.625 A325N	0
T3 140'-120'	0.625 A325N	0	0.625 A325N	0	0.625 A325N	0	0.625 A325N	0	0.625 A325N	0	0.625 A325N	0	0.625 A325N	0
T4 120'-100'	0.625 A325N	0	0.625 A325N	0	0.625 A325N	0	0.625 A325N	0	0.625 A325N	0	0.625 A325N	0	0.625 A325N	0
T5 100'-80'	0.625 A325N	0	0.625 A325N	0	0.625 A325N	0	0.625 A325N	0	0.625 A325N	0	0.625 A325N	0	0.625 A325N	0

Tower Elevation ft	Redundant Horizontal		Redundant Diagonal		Redundant Sub-Diagonal		Redundant Sub-Horizontal		Redundant Vertical		Redundant Hip		Redundant Hip Diagonal	
	Bolt Size in	No.	Bolt Size in	No.	Bolt Size in	No.	Bolt Size in	No.	Bolt Size in	No.	Bolt Size in	No.	Bolt Size in	No.
T6 80'-60'	0.625 A325N	0	0.625 A325N	0	0.625 A325N	0	0.625 A325N	0	0.625 A325N	0	0.625 A325N	0	0.625 A325N	0
T7 60'-40'	0.625 A325N	0	0.625 A325N	0	0.625 A325N	0	0.625 A325N	0	0.625 A325N	0	0.625 A325N	0	0.625 A325N	0
T8 40'-20'	0.625 A325N	0	0.625 A325N	0	0.625 A325N	0	0.625 A325N	0	0.625 A325N	0	0.625 A325N	0	0.625 A325N	0
T9 20'-0'	1.000 A325N	1	1.000 A325N	1	0.625 A325N	0	0.625 A325N	0	0.625 A325N	0	0.625 A325N	0	0.625 A325N	0

Feed Line/Linear Appurtenances - Entered As Round Or Flat

Description	Face or Leg	Allow Shield	Exclude From Torque Calculation	Component Type	Placement ft	Face Offset in	Lateral Offset (Frac FW)	#	# Per Row	Clear Spacing in	Width or Diameter in	Perimeter in	Weight klf
FSJ4-50B(1/2") *	A	No	No	Ar (CaAa)	170' - 0'	-6.000	0.4	1	1	0.850 0.750	0.520		0.000
AL5-50(7/8) *	A	No	No	Ar (CaAa)	104' - 0'	-8.000	0.44	10	10	0.850 0.750	1.100		0.000
AVA7-50(1-5/8) *	A	No	No	Ar (CaAa)	160' - 0'	-6.000	0.46	1	1	0.850 0.750	2.010		0.001
LDF6-50A(1-1/4") *	A	No	No	Ar (CaAa)	151' - 0'	-9.000	0.4	2	1	0.850 0.750	1.550		0.001
EW52(ELLIPTICAL) *	A	No	No	Ar (CaAa)	139' - 0'	-12.000	0.4	1	1	0.850 0.750	2.250		0.001
LDF2-50(3/8")	A	No	No	Ar (CaAa)	104' - 0'	-6.500	0.43	8	8	0.400	0.440		0.000
T-Brackets (Af) *	A	No	No	Af (CaAa)	150' - 0'	-6.000	0.45	1	1	1.000	1.000		0.008
LDF7-50A(1-5/8")	B	No	No	Ar (CaAa)	145' - 0'	-16.000	0.4	12	2	0.850 0.750	1.980		0.001
WR-VG82ST-BRDA(5/8")	B	No	No	Ar (CaAa)	145' - 0'	-13.000	0.39	4	1	0.750	0.645		0.000
LDF2-50(3/8")	B	No	No	Ar (CaAa)	145' - 0'	-11.000	0.39	2	1	0.750	0.440		0.000
T-Brackets (Af) *	B	No	No	Af (CaAa)	155' - 0'	-7.000	0.43	1	1	1.000	1.000		0.008
CU12PSM9P6XXX(1-1/2) *	B	No	No	Ar (CaAa)	122' - 0'	-16.000	0.42	1	1	0.850 0.750	1.600		0.002
LDF5-50A(7/8")	C	No	No	Ar (CaAa)	96' - 0'	0.000	-0.03	6	6	0.850 0.750	1.090		0.000
C4006L-NFNF(1-1/4")	C	No	No	Ar (CaAa)	96' - 0'	0.000	0.01	3	3	0.850 0.750	1.280		0.001
84080298(3/8")	C	No	No	Ar (CaAa)	96' - 0'	0.000	0.03	2	2	0.500	0.276		0.000
Feedline Ladder (Af) *	C	No	No	Af (CaAa)	100' - 0'	0.000	0	1	1	3.000	3.000		0.008

Description	Face or Leg	Allow Shield	Exclude From Torque Calculation	Component Type	Placement ft	Face Offset in	Lateral Offset (Frac FW)	#	# Per Row	Clear Spacing in	Width or Diameter in	Perimeter in	Weight klf
LDF7-50A(1-5/8")	C	No	No	Ar (CaAa)	130' - 0'	-16.000	0.42	14	8	0.500	1.980		0.001
LDF7-50A(1-5/8")	C	No	No	Ar (CaAa)	130' - 0'	-11.000	0.42	5	2	0.500	1.980		0.001
*													
HB158-21U6S24-xxM_TMO (1-5/8)	C	No	No	Ar (CaAa)	168' - 0'	-11.000	0.42	3	3	0.850 0.750	1.996		0.003
*													
LDF4-50A(1/2")	C	No	No	Ar (CaAa)	87' - 71'	-5.000	0.43	1	1	0.500	0.630		0.000
LDF4-50A(1/2")	C	No	No	Ar (CaAa)	71' - 0'	-5.000	0.43	2	1	0.500	0.630		0.000
T-Brackets (Af)	C	No	No	Af (CaAa)	169' - 0'	-7.000	0.43	1	1	1.000	1.000		0.008
*													
Thin Flat Bar Climbing Ladder	B	No	No	Af (CaAa)	170' - 0'	0.000	0	1	1	2.000	2.000		0.004
Safety Line 3/8	B	No	No	Ar (CaAa)	170' - 0'	1.000	0.01	1	1	0.375	0.375		0.000
* * *													

Feed Line/Linear Appurtenances - Entered As Area

Description	Face or Leg	Allow Shield	Exclude From Torque Calculation	Component Type	Placement ft	Total Number	C_AA_A ft^2/ft	Weight klf
* * *								

Feed Line/Linear Appurtenances Section Areas

Tower Section	Tower Elevation ft	Face	A_R ft^2	A_F ft^2	C_AA_A In Face ft^2	C_AA_A Out Face ft^2	Weight K
T1	170'-160'	A	0.000	0.000	0.520	0.000	0.001
		B	0.000	0.000	3.708	0.000	0.042
		C	0.000	0.000	6.290	0.000	0.136
T2	160'-140'	A	0.000	0.000	10.137	0.000	0.115
		B	0.000	0.000	23.527	0.000	0.267
		C	0.000	0.000	15.309	0.000	0.318
T3	140'-120'	A	0.000	0.000	18.868	0.000	0.222
		B	0.000	0.000	65.510	0.000	0.482
		C	0.000	0.000	52.929	0.000	0.474
T4	120'-100'	A	0.000	0.000	24.901	0.000	0.236

Tower Section	Tower Elevation ft	Face	A_R ft^2	A_F ft^2	C_AA_A In Face ft^2	C_AA_A Out Face ft^2	Weight K
		B	0.000	0.000	68.390	0.000	0.524
		C	0.000	0.000	90.549	0.000	0.630
T5	100'-80'	A	0.000	0.000	48.133	0.000	0.288
		B	0.000	0.000	68.390	0.000	0.524
		C	0.000	0.000	118.480	0.000	0.858
T6	80'-60'	A	0.000	0.000	48.133	0.000	0.288
		B	0.000	0.000	68.390	0.000	0.524
		C	0.000	0.000	124.364	0.000	0.877
T7	60'-40'	A	0.000	0.000	48.133	0.000	0.288
		B	0.000	0.000	68.390	0.000	0.524
		C	0.000	0.000	124.931	0.000	0.878
T8	40'-20'	A	0.000	0.000	48.133	0.000	0.288
		B	0.000	0.000	68.390	0.000	0.524
		C	0.000	0.000	124.931	0.000	0.878
T9	20'-0'	A	0.000	0.000	48.133	0.000	0.288
		B	0.000	0.000	68.390	0.000	0.524
		C	0.000	0.000	124.931	0.000	0.878

Feed Line/Linear Appurtenances Section Areas - With Ice

Tower Section	Tower Elevation ft	Face or Leg	Ice Thickness in	A_R ft^2	A_F ft^2	C_AA_A In Face ft^2	C_AA_A Out Face ft^2	Weight K
T1	170'-160'	A	2.026	0.000	0.000	4.572	0.000	0.064
		B		0.000	0.000	11.813	0.000	0.225
		C		0.000	0.000	18.354	0.000	0.386
T2	160'-140'	A	2.007	0.000	0.000	40.042	0.000	0.719
		B		0.000	0.000	56.194	0.000	1.203
		C		0.000	0.000	44.249	0.000	0.913
T3	140'-120'	A	1.978	0.000	0.000	67.813	0.000	1.248
		B		0.000	0.000	131.824	0.000	2.758
		C		0.000	0.000	92.118	0.000	1.804
T4	120'-100'	A	1.946	0.000	0.000	84.771	0.000	1.458
		B		0.000	0.000	140.634	0.000	2.903
		C		0.000	0.000	139.502	0.000	2.671
T5	100'-80'	A	1.907	0.000	0.000	151.758	0.000	2.306
		B		0.000	0.000	139.229	0.000	2.841
		C		0.000	0.000	224.133	0.000	3.903
T6	80'-60'	A	1.860	0.000	0.000	150.081	0.000	2.240
		B		0.000	0.000	137.509	0.000	2.766
		C		0.000	0.000	248.478	0.000	4.148
T7	60'-40'	A	1.798	0.000	0.000	147.901	0.000	2.157
		B		0.000	0.000	135.273	0.000	2.671
		C		0.000	0.000	249.035	0.000	4.076
T8	40'-20'	A	1.709	0.000	0.000	144.734	0.000	2.038
		B		0.000	0.000	132.023	0.000	2.536
		C		0.000	0.000	244.094	0.000	3.898
T9	20'-0'	A	1.531	0.000	0.000	138.462	0.000	1.811
		B		0.000	0.000	125.581	0.000	2.281
		C		0.000	0.000	234.306	0.000	3.558

Feed Line Center of Pressure

Section	Elevation ft	CP_X in	CP_Z in	CP_X Ice in	CP_Z Ice in
T1	170'-160'	-2.958	-0.142	-3.401	-1.493
T2	160'-140'	0.270	-1.667	0.264	-4.129
T3	140'-120'	-0.577	1.572	1.863	-1.702
T4	120'-100'	-6.122	1.875	-1.719	-1.582
T5	100'-80'	-5.591	-2.833	-1.798	-5.243
T6	80'-60'	-5.994	-2.445	-2.721	-4.169
T7	60'-40'	-6.210	-2.388	-3.026	-4.238
T8	40'-20'	-6.443	-2.457	-3.258	-4.570
T9	20'-0'	-6.334	-2.406	-3.417	-4.751

Shielding Factor Ka

Tower Section	Feed Line Record No.	Description	Feed Line Segment Elev.	K_a No Ice	K_a Ice
T1	1	FSJ4-50B(1/2")	160.00 - 170.00	0.6000	0.6000
T1	32	HB158-21U6S24-xxM_TMO (1-5/8)	160.00 - 168.00	0.6000	0.6000
T1	36	T-Brackets (Af)	160.00 - 169.00	0.6000	0.6000
T1	38	Thin Flat Bar Climbing Ladder	160.00 - 170.00	0.6000	0.6000
T1	39	Safety Line 3/8	160.00 - 170.00	0.6000	0.6000
T2	1	FSJ4-50B(1/2")	140.00 - 160.00	0.6000	0.6000
T2	6	AVA7-50(1-5/8)	140.00 - 160.00	0.6000	0.6000
T2	8	LDF6-50A(1-1/4")	140.00 - 151.00	0.6000	0.6000
T2	13	T-Brackets (Af)	140.00 - 150.00	0.6000	0.6000
T2	15	LDF7-50A(1-5/8")	140.00 - 145.00	0.6000	0.6000
T2	16	WR-VG82ST-BRDA(5/8")	140.00 - 145.00	0.6000	0.6000
T2	18	LDF2-50(3/8")	140.00 - 145.00	0.6000	0.6000
T2	19	T-Brackets (Af)	140.00 - 155.00	0.6000	0.6000
T2	32	HB158-21U6S24-xxM_TMO (1-5/8)	140.00 - 160.00	0.6000	0.6000
T2	36	T-Brackets (Af)	140.00 - 160.00	0.6000	0.6000
T2	38	Thin Flat Bar Climbing Ladder	140.00 - 160.00	0.6000	0.6000
T2	39	Safety Line 3/8	140.00 - 160.00	0.6000	0.6000
T3	1	FSJ4-50B(1/2")	120.00 - 140.00	0.6000	0.6000
T3	6	AVA7-50(1-5/8)	120.00 - 140.00	0.6000	0.6000
T3	8	LDF6-50A(1-1/4")	120.00 - 140.00	0.6000	0.6000
T3	10	EW52(ELLIPTICAL)	120.00 -	0.6000	0.6000

Tower Section	Feed Line Record No.	Description	Feed Line Segment Elev.	K_a No Ice	K_a Ice
			139.00		
T3	13	T-Brackets (Af)	120.00 - 140.00	0.6000	0.6000
T3	15	LDF7-50A(1-5/8")	120.00 - 140.00	0.6000	0.6000
T3	16	WR-VG82ST-BRDA(5/8")	120.00 - 140.00	0.6000	0.6000
T3	18	LDF2-50(3/8")	120.00 - 140.00	0.6000	0.6000
T3	19	T-Brackets (Af)	120.00 - 140.00	0.6000	0.6000
T3	21	CU12PSM9P6XXX(1-1/2)	120.00 - 122.00	0.6000	0.6000
T3	28	LDF7-50A(1-5/8")	120.00 - 130.00	0.6000	0.6000
T3	29	LDF7-50A(1-5/8")	120.00 - 130.00	0.6000	0.6000
T3	32	HB158-21U6S24-xxM_TMO (1-5/8)	120.00 - 140.00	0.6000	0.6000
T3	36	T-Brackets (Af)	120.00 - 140.00	0.6000	0.6000
T3	38	Thin Flat Bar Climbing Ladder	120.00 - 140.00	0.6000	0.6000
T3	39	Safety Line 3/8	120.00 - 140.00	0.6000	0.6000
T4	1	FSJ4-50B(1/2")	100.00 - 120.00	0.6000	0.6000
T4	4	AL5-50(7/8)	100.00 - 104.00	0.6000	0.6000
T4	6	AVA7-50(1-5/8)	100.00 - 120.00	0.6000	0.6000
T4	8	LDF6-50A(1-1/4")	100.00 - 120.00	0.6000	0.6000
T4	10	EW52(ELLIPTICAL)	100.00 - 120.00	0.6000	0.6000
T4	12	LDF2-50(3/8")	100.00 - 104.00	0.6000	0.6000
T4	13	T-Brackets (Af)	100.00 - 120.00	0.6000	0.6000
T4	15	LDF7-50A(1-5/8")	100.00 - 120.00	0.6000	0.6000
T4	16	WR-VG82ST-BRDA(5/8")	100.00 - 120.00	0.6000	0.6000
T4	18	LDF2-50(3/8")	100.00 - 120.00	0.6000	0.6000
T4	19	T-Brackets (Af)	100.00 - 120.00	0.6000	0.6000
T4	21	CU12PSM9P6XXX(1-1/2)	100.00 - 120.00	0.6000	0.6000
T4	28	LDF7-50A(1-5/8")	100.00 - 120.00	0.6000	0.6000
T4	29	LDF7-50A(1-5/8")	100.00 - 120.00	0.6000	0.6000
T4	32	HB158-21U6S24-xxM_TMO (1-5/8)	100.00 - 120.00	0.6000	0.6000
T4	36	T-Brackets (Af)	100.00 - 120.00	0.6000	0.6000
T4	38	Thin Flat Bar Climbing Ladder	100.00 - 120.00	0.6000	0.6000
T4	39	Safety Line 3/8	100.00 - 120.00	0.6000	0.6000
T5	1	FSJ4-50B(1/2")	80.00 - 100.00	0.6000	0.6000

Tower Section	Feed Line Record No.	Description	Feed Line Segment Elev.	K_a No Ice	K_a Ice
T5	4	AL5-50(7/8)	80.00 - 100.00	0.6000	0.6000
T5	6	AVA7-50(1-5/8)	80.00 - 100.00	0.6000	0.6000
T5	8	LDF6-50A(1-1/4")	80.00 - 100.00	0.6000	0.6000
T5	10	EW52(ELLIPTICAL)	80.00 - 100.00	0.6000	0.6000
T5	12	LDF2-50(3/8")	80.00 - 100.00	0.6000	0.6000
T5	13	T-Brackets (Af)	80.00 - 100.00	0.6000	0.6000
T5	15	LDF7-50A(1-5/8")	80.00 - 100.00	0.6000	0.6000
T5	16	WR-VG82ST-BRDA(5/8")	80.00 - 100.00	0.6000	0.6000
T5	18	LDF2-50(3/8")	80.00 - 100.00	0.6000	0.6000
T5	19	T-Brackets (Af)	80.00 - 100.00	0.6000	0.6000
T5	21	CU12PSM9P6XXX(1-1/2)	80.00 - 100.00	0.6000	0.6000
T5	23	LDF5-50A(7/8")	80.00 - 96.00	0.6000	0.6000
T5	24	C4006L-NFNF(1-1/4")	80.00 - 96.00	0.6000	0.6000
T5	25	84080298(3/8")	80.00 - 96.00	0.6000	0.6000
T5	26	Feedline Ladder (Af)	80.00 - 100.00	0.6000	0.6000
T5	28	LDF7-50A(1-5/8")	80.00 - 100.00	0.6000	0.6000
T5	29	LDF7-50A(1-5/8")	80.00 - 100.00	0.6000	0.6000
T5	32	HB158-21U6S24-xxM_TMO (1-5/8)	80.00 - 100.00	0.6000	0.6000
T5	34	LDF4-50A(1/2")	80.00 - 87.00	0.6000	0.6000
T5	36	T-Brackets (Af)	80.00 - 100.00	0.6000	0.6000
T5	38	Thin Flat Bar Climbing Ladder	80.00 - 100.00	0.6000	0.6000
T5	39	Safety Line 3/8	80.00 - 100.00	0.6000	0.6000
T6	1	FSJ4-50B(1/2")	60.00 - 80.00	0.6000	0.6000
T6	4	AL5-50(7/8)	60.00 - 80.00	0.6000	0.6000
T6	6	AVA7-50(1-5/8)	60.00 - 80.00	0.6000	0.6000
T6	8	LDF6-50A(1-1/4")	60.00 - 80.00	0.6000	0.6000
T6	10	EW52(ELLIPTICAL)	60.00 - 80.00	0.6000	0.6000
T6	12	LDF2-50(3/8")	60.00 - 80.00	0.6000	0.6000
T6	13	T-Brackets (Af)	60.00 - 80.00	0.6000	0.6000
T6	15	LDF7-50A(1-5/8")	60.00 - 80.00	0.6000	0.6000
T6	16	WR-VG82ST-BRDA(5/8")	60.00 - 80.00	0.6000	0.6000
T6	18	LDF2-50(3/8")	60.00 - 80.00	0.6000	0.6000
T6	19	T-Brackets (Af)	60.00 - 80.00	0.6000	0.6000
T6	21	CU12PSM9P6XXX(1-1/2)	60.00 - 80.00	0.6000	0.6000
T6	23	LDF5-50A(7/8")	60.00 - 80.00	0.6000	0.6000
T6	24	C4006L-NFNF(1-1/4")	60.00 - 80.00	0.6000	0.6000
T6	25	84080298(3/8")	60.00 - 80.00	0.6000	0.6000
T6	26	Feedline Ladder (Af)	60.00 - 80.00	0.6000	0.6000
T6	28	LDF7-50A(1-5/8")	60.00 - 80.00	0.6000	0.6000
T6	29	LDF7-50A(1-5/8")	60.00 - 80.00	0.6000	0.6000
T6	32	HB158-21U6S24-xxM_TMO (1-5/8)	60.00 - 80.00	0.6000	0.6000
T6	34	LDF4-50A(1/2")	71.00 - 80.00	0.6000	0.6000
T6	35	LDF4-50A(1/2")	60.00 - 71.00	0.6000	0.6000
T6	36	T-Brackets (Af)	60.00 - 80.00	0.6000	0.6000
T6	38	Thin Flat Bar Climbing Ladder	60.00 - 80.00	0.6000	0.6000
T6	39	Safety Line 3/8	60.00 - 80.00	0.6000	0.6000
T7	1	FSJ4-50B(1/2")	40.00 - 60.00	0.6000	0.6000
T7	4	AL5-50(7/8)	40.00 - 60.00	0.6000	0.6000
T7	6	AVA7-50(1-5/8)	40.00 - 60.00	0.6000	0.6000
T7	8	LDF6-50A(1-1/4")	40.00 - 60.00	0.6000	0.6000
T7	10	EW52(ELLIPTICAL)	40.00 - 60.00	0.6000	0.6000
T7	12	LDF2-50(3/8")	40.00 - 60.00	0.6000	0.6000
T7	13	T-Brackets (Af)	40.00 - 60.00	0.6000	0.6000
T7	15	LDF7-50A(1-5/8")	40.00 - 60.00	0.6000	0.6000
T7	16	WR-VG82ST-BRDA(5/8")	40.00 - 60.00	0.6000	0.6000
T7	18	LDF2-50(3/8")	40.00 - 60.00	0.6000	0.6000
T7	19	T-Brackets (Af)	40.00 - 60.00	0.6000	0.6000
T7	21	CU12PSM9P6XXX(1-1/2)	40.00 - 60.00	0.6000	0.6000

Tower Section	Feed Line Record No.	Description	Feed Line Segment Elev.	K_a No Ice	K_a Ice
T7	23	LDF5-50A(7/8")	40.00 - 60.00	0.6000	0.6000
T7	24	C4006L-NFNF(1-1/4")	40.00 - 60.00	0.6000	0.6000
T7	25	84080298(3/8")	40.00 - 60.00	0.6000	0.6000
T7	26	Feedline Ladder (Af)	40.00 - 60.00	0.6000	0.6000
T7	28	LDF7-50A(1-5/8")	40.00 - 60.00	0.6000	0.6000
T7	29	LDF7-50A(1-5/8")	40.00 - 60.00	0.6000	0.6000
T7	32	HB158-21U6S24-xxM_TMO (1-5/8)	40.00 - 60.00	0.6000	0.6000
T7	35	LDF4-50A(1/2")	40.00 - 60.00	0.6000	0.6000
T7	36	T-Brackets (Af)	40.00 - 60.00	0.6000	0.6000
T7	38	Thin Flat Bar Climbing Ladder	40.00 - 60.00	0.6000	0.6000
T7	39	Safety Line 3/8	40.00 - 60.00	0.6000	0.6000
T8	1	FSJ4-50B(1/2")	20.00 - 40.00	0.6000	0.6000
T8	4	AL5-50(7/8)	20.00 - 40.00	0.6000	0.6000
T8	6	AVA7-50(1-5/8)	20.00 - 40.00	0.6000	0.6000
T8	8	LDF6-50A(1-1/4")	20.00 - 40.00	0.6000	0.6000
T8	10	EW52(ELLIPTICAL)	20.00 - 40.00	0.6000	0.6000
T8	12	LDF2-50(3/8")	20.00 - 40.00	0.6000	0.6000
T8	13	T-Brackets (Af)	20.00 - 40.00	0.6000	0.6000
T8	15	LDF7-50A(1-5/8")	20.00 - 40.00	0.6000	0.6000
T8	16	WR-VG82ST-BRDA(5/8")	20.00 - 40.00	0.6000	0.6000
T8	18	LDF2-50(3/8")	20.00 - 40.00	0.6000	0.6000
T8	19	T-Brackets (Af)	20.00 - 40.00	0.6000	0.6000
T8	21	CU12PSM9P6XXX(1-1/2)	20.00 - 40.00	0.6000	0.6000
T8	23	LDF5-50A(7/8")	20.00 - 40.00	0.6000	0.6000
T8	24	C4006L-NFNF(1-1/4")	20.00 - 40.00	0.6000	0.6000
T8	25	84080298(3/8")	20.00 - 40.00	0.6000	0.6000
T8	26	Feedline Ladder (Af)	20.00 - 40.00	0.6000	0.6000
T8	28	LDF7-50A(1-5/8")	20.00 - 40.00	0.6000	0.6000
T8	29	LDF7-50A(1-5/8")	20.00 - 40.00	0.6000	0.6000
T8	32	HB158-21U6S24-xxM_TMO (1-5/8)	20.00 - 40.00	0.6000	0.6000
T8	35	LDF4-50A(1/2")	20.00 - 40.00	0.6000	0.6000
T8	36	T-Brackets (Af)	20.00 - 40.00	0.6000	0.6000
T8	38	Thin Flat Bar Climbing Ladder	20.00 - 40.00	0.6000	0.6000
T8	39	Safety Line 3/8	20.00 - 40.00	0.6000	0.6000
T9	1	FSJ4-50B(1/2")	0.00 - 20.00	0.6000	0.6000
T9	4	AL5-50(7/8)	0.00 - 20.00	0.6000	0.6000
T9	6	AVA7-50(1-5/8)	0.00 - 20.00	0.6000	0.6000
T9	8	LDF6-50A(1-1/4")	0.00 - 20.00	0.6000	0.6000
T9	10	EW52(ELLIPTICAL)	0.00 - 20.00	0.6000	0.6000
T9	12	LDF2-50(3/8")	0.00 - 20.00	0.6000	0.6000
T9	13	T-Brackets (Af)	0.00 - 20.00	0.6000	0.6000
T9	15	LDF7-50A(1-5/8")	0.00 - 20.00	0.6000	0.6000
T9	16	WR-VG82ST-BRDA(5/8")	0.00 - 20.00	0.6000	0.6000
T9	18	LDF2-50(3/8")	0.00 - 20.00	0.6000	0.6000
T9	19	T-Brackets (Af)	0.00 - 20.00	0.6000	0.6000
T9	21	CU12PSM9P6XXX(1-1/2)	0.00 - 20.00	0.6000	0.6000
T9	23	LDF5-50A(7/8")	0.00 - 20.00	0.6000	0.6000
T9	24	C4006L-NFNF(1-1/4")	0.00 - 20.00	0.6000	0.6000
T9	25	84080298(3/8")	0.00 - 20.00	0.6000	0.6000
T9	26	Feedline Ladder (Af)	0.00 - 20.00	0.6000	0.6000
T9	28	LDF7-50A(1-5/8")	0.00 - 20.00	0.6000	0.6000
T9	29	LDF7-50A(1-5/8")	0.00 - 20.00	0.6000	0.6000
T9	32	HB158-21U6S24-xxM_TMO (1-5/8)	0.00 - 20.00	0.6000	0.6000
T9	35	LDF4-50A(1/2")	0.00 - 20.00	0.6000	0.6000
T9	36	T-Brackets (Af)	0.00 - 20.00	0.6000	0.6000
T9	38	Thin Flat Bar Climbing Ladder	0.00 - 20.00	0.6000	0.6000

Tower Section	Feed Line Record No.	Description	Feed Line Segment Elev.	K_a No Ice	K_a Ice
T9	39	Safety Line 3/8	0.00 - 20.00	0.6000	0.6000

Discrete Tower Loads

Description	Face or Leg	Offset Type	Offsets: Horz Lateral Vert ft ft ft	Azimuth Adjustment °	Placement ft		C_AA_A Front ft^2	C_AA_A Side ft^2	Weight K
Lightning Rod 5/8" x 5'	A	From Leg	0.000 0' 2'6"	0.000	170'	No Ice 1/2" Ice 1" Ice 2" Ice	0.313 0.826 1.322 1.957	0.313 0.826 1.322 1.957	0.006 0.010 0.016 0.040
*									
DB806-XC	C	From Leg	0.000 0' 4'	0.000	170'	No Ice 1/2" Ice 1" Ice 2" Ice	1.140 1.675 2.025 2.753	1.140 1.675 2.025 2.753	0.021 0.030 0.043 0.080
8' x 2.375" Mount Pipe	C	From Leg	0.000 0' 0'	0.000	170'	No Ice 1/2" Ice 1" Ice 2" Ice	1.900 2.728 3.401 4.396	1.900 2.728 3.401 4.396	0.029 0.044 0.063 0.119
* *									
AIR 6419 B41_TMO	A	From Leg	4.000 0' 1'	0.000	168'	No Ice 1/2" Ice 1" Ice 2" Ice	6.998 7.527 8.073 9.219	2.830 3.243 3.675 4.591	0.097 0.140 0.188 0.298
AIR 6419 B41_TMO	B	From Leg	4.000 0' 1'	0.000	168'	No Ice 1/2" Ice 1" Ice 2" Ice	6.998 7.527 8.073 9.219	2.830 3.243 3.675 4.591	0.097 0.140 0.188 0.298
AIR 6419 B41_TMO	C	From Leg	4.000 0' 1'	0.000	168'	No Ice 1/2" Ice 1" Ice 2" Ice	6.998 7.527 8.073 9.219	2.830 3.243 3.675 4.591	0.097 0.140 0.188 0.298
4003_840590966_TMO	A	From Leg	4.000 0' 1'	0.000	168'	No Ice 1/2" Ice 1" Ice 2" Ice	10.237 10.781 11.334 12.468	3.117 3.587 4.066 5.051	0.136 0.240 0.353 0.605
4003_840590966_TMO	B	From Leg	4.000 0' 1'	0.000	168'	No Ice 1/2" Ice 1" Ice 2" Ice	10.237 10.781 11.334 12.468	3.117 3.587 4.066 5.051	0.136 0.240 0.353 0.605
4003_840590966_TMO	C	From Leg	4.000 0' 1'	0.000	168'	No Ice 1/2" Ice 1" Ice 2" Ice	10.237 10.781 11.334 12.468	3.117 3.587 4.066 5.051	0.136 0.240 0.353 0.605
APXVLL19P_43-C-A20_TMO	A	From Leg	4.000 0' 1'	0.000	168'	No Ice 1/2" Ice 1" Ice 2" Ice	5.154 5.681 6.220 7.334	2.110 2.597 3.096 4.130	0.048 0.092 0.142 0.261
APXVLL19P_43-C-A20_TM	B	From Leg	4.000	0.000	168'	No Ice	5.154	2.110	0.048

Description	Face or Leg	Offset Type	Offsets: Horz Lateral Vert ft ft ft	Azimuth Adjustment °	Placement ft		C_AA_A Front ft^2	C_AA_A Side ft^2	Weight K
O			0'			1/2" Ice	5.681	2.597	0.092
			1'			1" Ice	6.220	3.096	0.142
						2" Ice	7.334	4.130	0.261
APXVLL19P_43-C-A20_TM	C	From Leg	4.000	0.000	168'	No Ice	5.154	2.110	0.048
O			0'			1/2" Ice	5.681	2.597	0.092
			1'			1" Ice	6.220	3.096	0.142
						2" Ice	7.334	4.130	0.261
RADIO 4460 B2/B25	A	From Leg	4.000	0.000	168'	No Ice	2.139	1.686	0.109
B66_TMO			0'			1/2" Ice	2.321	1.850	0.131
			1'			1" Ice	2.511	2.022	0.156
						2" Ice	2.912	2.387	0.217
RADIO 4460 B2/B25	B	From Leg	4.000	0.000	168'	No Ice	2.139	1.686	0.109
B66_TMO			0'			1/2" Ice	2.321	1.850	0.131
			1'			1" Ice	2.511	2.022	0.156
						2" Ice	2.912	2.387	0.217
RADIO 4460 B2/B25	C	From Leg	4.000	0.000	168'	No Ice	2.139	1.686	0.109
B66_TMO			0'			1/2" Ice	2.321	1.850	0.131
			1'			1" Ice	2.511	2.022	0.156
						2" Ice	2.912	2.387	0.217
Radio 4480_TMOV2	A	From Leg	4.000	0.000	168'	No Ice	2.878	1.397	0.081
			0'			1/2" Ice	3.091	1.558	0.103
			1'			1" Ice	3.312	1.727	0.128
						2" Ice	3.775	2.090	0.188
Radio 4480_TMOV2	B	From Leg	4.000	0.000	168'	No Ice	2.878	1.397	0.081
			0'			1/2" Ice	3.091	1.558	0.103
			1'			1" Ice	3.312	1.727	0.128
						2" Ice	3.775	2.090	0.188
Radio 4480_TMOV2	C	From Leg	4.000	0.000	168'	No Ice	2.878	1.397	0.081
			0'			1/2" Ice	3.091	1.558	0.103
			1'			1" Ice	3.312	1.727	0.128
						2" Ice	3.775	2.090	0.188
(4) 8' x 2" Mount Pipe	A	From Leg	4.000	0.000	168'	No Ice	1.900	1.900	0.029
			0'			1/2" Ice	2.728	2.728	0.044
			0'			1" Ice	3.401	3.401	0.063
						2" Ice	4.396	4.396	0.119
(4) 8' x 2" Mount Pipe	B	From Leg	4.000	0.000	168'	No Ice	1.900	1.900	0.029
			0'			1/2" Ice	2.728	2.728	0.044
			0'			1" Ice	3.401	3.401	0.063
						2" Ice	4.396	4.396	0.119
(4) 8' x 2" Mount Pipe	C	From Leg	4.000	0.000	168'	No Ice	1.900	1.900	0.029
			0'			1/2" Ice	2.728	2.728	0.044
			0'			1" Ice	3.401	3.401	0.063
						2" Ice	4.396	4.396	0.119
10' horizontal x 2" Pipe	A	From Leg	4.000	0.000	168'	No Ice	1.900	0.010	0.027
Mount			0'			1/2" Ice	2.920	0.040	0.042
			0'			1" Ice	3.970	0.090	0.063
						2" Ice	5.650	0.210	0.126
10' horizontal x 2" Pipe	B	From Leg	4.000	0.000	168'	No Ice	1.900	0.010	0.027
Mount			0'			1/2" Ice	2.920	0.040	0.042
			0'			1" Ice	3.970	0.090	0.063
						2" Ice	5.650	0.210	0.126
10' horizontal x 2" Pipe	C	From Leg	4.000	0.000	168'	No Ice	1.900	0.010	0.027
Mount			0'			1/2" Ice	2.920	0.040	0.042
			0'			1" Ice	3.970	0.090	0.063
						2" Ice	5.650	0.210	0.126
Site Pro1 VFA12-HD	A	From Leg	4.000	0.000	168'	No Ice	13.200	13.200	0.658
			0'			1/2" Ice	19.500	19.500	0.804

Description	Face or Leg	Offset Type	Offsets: Horz Lateral Vert ft ft ft	Azimuth Adjustment °	Placement ft		C_AA_A Front ft^2	C_AA_A Side ft^2	Weight K
			0'			1" Ice	25.800	25.800	1.015
						2" Ice	38.400	38.400	1.437
Site Pro1 VFA12-HD	B	From Leg	4.000	0.000	168'	No Ice	13.200	13.200	0.658
			0'			1/2" Ice	19.500	19.500	0.804
			0'			1" Ice	25.800	25.800	1.015
						2" Ice	38.400	38.400	1.437
Site Pro1 VFA12-HD	C	From Leg	4.000	0.000	168'	No Ice	13.200	13.200	0.658
			0'			1/2" Ice	19.500	19.500	0.804
			0'			1" Ice	25.800	25.800	1.015
						2" Ice	38.400	38.400	1.437
*									
*									
*									
6813-2 HW	C	From Leg	4.000	0.000	160'	No Ice	42.376	33.075	0.096
			0'			1/2" Ice	43.429	34.143	0.370
			2'			1" Ice	44.489	35.219	0.658
						2" Ice	46.630	37.393	1.278
Side Arm Mount [SO 305-1]	C	From Leg	0.500	0.000	160'	No Ice	0.530	1.520	0.030
			0'			1/2" Ice	0.780	2.070	0.044
			0'			1" Ice	1.060	2.660	0.064
						2" Ice	1.730	3.910	0.125
*									
(2) P65.15.XL.0 w/ Mount Pipe	B	From Leg	4.000	0.000	151'	No Ice	5.304	3.665	0.040
			0'			1/2" Ice	5.692	4.278	0.084
			0'			1" Ice	6.087	4.902	0.134
						2" Ice	6.903	6.188	0.254
(2) P65.15.XL.0 w/ Mount Pipe	C	From Leg	4.000	0.000	151'	No Ice	5.304	3.665	0.040
			0'			1/2" Ice	5.692	4.278	0.084
			0'			1" Ice	6.087	4.902	0.134
						2" Ice	6.903	6.188	0.254
Pipe Mount [PM 601-1]	B	From Leg	0.500	0.000	151'	No Ice	1.320	1.320	0.065
			0'			1/2" Ice	1.580	1.580	0.077
			0'			1" Ice	1.840	1.840	0.093
						2" Ice	2.400	2.400	0.134
Pipe Mount [PM 601-1]	C	From Leg	0.500	0.000	151'	No Ice	1.320	1.320	0.065
			0'			1/2" Ice	1.580	1.580	0.077
			0'			1" Ice	1.840	1.840	0.093
						2" Ice	2.400	2.400	0.134
Sector Mount [SM 602-1]	B	From Leg	2.000	0.000	151'	No Ice	20.000	8.530	0.513
			0'			1/2" Ice	24.070	11.090	0.707
			0'			1" Ice	28.330	13.630	0.947
						2" Ice	37.820	18.640	1.562
Sector Mount [SM 602-1]	C	From Leg	2.000	0.000	151'	No Ice	20.000	8.530	0.513
			0'			1/2" Ice	24.070	11.090	0.707
			0'			1" Ice	28.330	13.630	0.947
						2" Ice	37.820	18.640	1.562
*									
800 10122 w/ Mount Pipe	A	From Leg	4.000	0.000	145'	No Ice	6.235	4.893	0.086
			0'			1/2" Ice	6.890	5.530	0.144
			0'			1" Ice	7.560	6.182	0.212
						2" Ice	8.944	7.530	0.384
800 10122 w/ Mount Pipe	B	From Leg	4.000	0.000	145'	No Ice	6.235	4.893	0.086
			0'			1/2" Ice	6.890	5.530	0.144
			0'			1" Ice	7.560	6.182	0.212
						2" Ice	8.944	7.530	0.384
800 10122 w/ Mount Pipe	C	From Leg	4.000	0.000	145'	No Ice	6.235	4.893	0.086
			0'			1/2" Ice	6.890	5.530	0.144

Description	Face or Leg	Offset Type	Offsets: Horz Lateral Vert ft ft ft	Azimuth Adjustment °	Placement ft		C_AA_A Front ft^2	C_AA_A Side ft^2	Weight K
			0'			1" Ice	7.560	6.182	0.212
						2" Ice	8.944	7.530	0.384
AM-X-CD-16-65-00T-RET	A	From Leg	4.000	0.000	145'	No Ice	4.628	3.275	0.074
w/ Mount Pipe			0'			1/2" Ice	5.064	3.692	0.133
			0'			1" Ice	5.510	4.119	0.203
						2" Ice	6.433	5.005	0.376
AM-X-CD-16-65-00T-RET	B	From Leg	4.000	0.000	145'	No Ice	4.628	3.275	0.074
w/ Mount Pipe			0'			1/2" Ice	5.064	3.692	0.133
			0'			1" Ice	5.510	4.119	0.203
						2" Ice	6.433	5.005	0.376
AM-X-CD-16-65-00T-RET	C	From Leg	4.000	0.000	145'	No Ice	4.628	3.275	0.074
w/ Mount Pipe			0'			1/2" Ice	5.064	3.692	0.133
			0'			1" Ice	5.510	4.119	0.203
						2" Ice	6.433	5.005	0.376
QS66512-2 w/ Mount Pipe	A	From Leg	4.000	0.000	145'	No Ice	4.035	4.181	0.137
			0'			1/2" Ice	4.421	4.569	0.206
			0'			1" Ice	4.816	4.966	0.287
						2" Ice	5.634	5.787	0.482
QS66512-2 w/ Mount Pipe	B	From Leg	4.000	0.000	145'	No Ice	4.035	4.181	0.137
			0'			1/2" Ice	4.421	4.569	0.206
			0'			1" Ice	4.816	4.966	0.287
						2" Ice	5.634	5.787	0.482
QS66512-2 w/ Mount Pipe	C	From Leg	4.000	0.000	145'	No Ice	4.035	4.181	0.137
			0'			1/2" Ice	4.421	4.569	0.206
			0'			1" Ice	4.816	4.966	0.287
						2" Ice	5.634	5.787	0.482
(4) 860 10025	A	From Leg	4.000	0.000	145'	No Ice	0.142	0.121	0.001
			0'			1/2" Ice	0.196	0.173	0.003
			0'			1" Ice	0.259	0.231	0.005
						2" Ice	0.408	0.376	0.014
(4) 860 10025	B	From Leg	4.000	0.000	145'	No Ice	0.142	0.121	0.001
			0'			1/2" Ice	0.196	0.173	0.003
			0'			1" Ice	0.259	0.231	0.005
						2" Ice	0.408	0.376	0.014
(4) 860 10025	C	From Leg	4.000	0.000	145'	No Ice	0.142	0.121	0.001
			0'			1/2" Ice	0.196	0.173	0.003
			0'			1" Ice	0.259	0.231	0.005
						2" Ice	0.408	0.376	0.014
(2) LGP21401	A	From Leg	4.000	0.000	145'	No Ice	1.104	0.207	0.014
			0'			1/2" Ice	1.239	0.274	0.021
			0'			1" Ice	1.381	0.348	0.030
						2" Ice	1.688	0.521	0.055
(2) LGP21401	B	From Leg	4.000	0.000	145'	No Ice	1.104	0.207	0.014
			0'			1/2" Ice	1.239	0.274	0.021
			0'			1" Ice	1.381	0.348	0.030
						2" Ice	1.688	0.521	0.055
(2) LGP21401	C	From Leg	4.000	0.000	145'	No Ice	1.104	0.207	0.014
			0'			1/2" Ice	1.239	0.274	0.021
			0'			1" Ice	1.381	0.348	0.030
						2" Ice	1.688	0.521	0.055
RRUS 32 B66	A	From Leg	4.000	0.000	145'	No Ice	2.743	1.668	0.053
			0'			1/2" Ice	2.965	1.855	0.074
			0'			1" Ice	3.194	2.049	0.098
						2" Ice	3.675	2.458	0.157
RRUS 32 B66	B	From Leg	4.000	0.000	145'	No Ice	2.743	1.668	0.053
			0'			1/2" Ice	2.965	1.855	0.074
			0'			1" Ice	3.194	2.049	0.098

Description	Face or Leg	Offset Type	Offsets: Horz Lateral Vert ft ft ft	Azimuth Adjustment °	Placement ft		C_AA_A Front ft^2	C_AA_A Side ft^2	Weight K
						2" Ice	3.675	2.458	0.157
RRUS 32 B66	C	From Leg	4.000	0.000	145'	No Ice	2.743	1.668	0.053
			0'			1/2" Ice	2.965	1.855	0.074
			0'			1" Ice	3.194	2.049	0.098
						2" Ice	3.675	2.458	0.157
RRUS 32	A	From Leg	4.000	0.000	145'	No Ice	2.857	1.777	0.055
			0'			1/2" Ice	3.083	1.968	0.077
			0'			1" Ice	3.316	2.166	0.103
						2" Ice	3.805	2.583	0.165
RRUS 32	B	From Leg	4.000	0.000	145'	No Ice	2.857	1.777	0.055
			0'			1/2" Ice	3.083	1.968	0.077
			0'			1" Ice	3.316	2.166	0.103
						2" Ice	3.805	2.583	0.165
RRUS 32	C	From Leg	4.000	0.000	145'	No Ice	2.857	1.777	0.055
			0'			1/2" Ice	3.083	1.968	0.077
			0'			1" Ice	3.316	2.166	0.103
						2" Ice	3.805	2.583	0.165
(2) DBC0061F1V51-2	A	From Leg	4.000	0.000	145'	No Ice	0.433	0.413	0.025
			0'			1/2" Ice	0.518	0.496	0.031
			0'			1" Ice	0.609	0.586	0.038
						2" Ice	0.815	0.788	0.057
(2) DBC0061F1V51-2	B	From Leg	4.000	0.000	145'	No Ice	0.433	0.413	0.025
			0'			1/2" Ice	0.518	0.496	0.031
			0'			1" Ice	0.609	0.586	0.038
						2" Ice	0.815	0.788	0.057
(2) DBC0061F1V51-2	C	From Leg	4.000	0.000	145'	No Ice	0.433	0.413	0.025
			0'			1/2" Ice	0.518	0.496	0.031
			0'			1" Ice	0.609	0.586	0.038
						2" Ice	0.815	0.788	0.057
(2) RRUS 11	A	From Leg	4.000	0.000	145'	No Ice	2.784	1.187	0.048
			0'			1/2" Ice	2.992	1.334	0.068
			0'			1" Ice	3.207	1.490	0.092
						2" Ice	3.658	1.833	0.150
(2) RRUS 11	B	From Leg	4.000	0.000	145'	No Ice	2.784	1.187	0.048
			0'			1/2" Ice	2.992	1.334	0.068
			0'			1" Ice	3.207	1.490	0.092
						2" Ice	3.658	1.833	0.150
(2) RRUS 11	C	From Leg	4.000	0.000	145'	No Ice	2.784	1.187	0.048
			0'			1/2" Ice	2.992	1.334	0.068
			0'			1" Ice	3.207	1.490	0.092
						2" Ice	3.658	1.833	0.150
DC6-48-60-18-8F	A	From Leg	4.000	0.000	145'	No Ice	0.850	0.850	0.019
			0'			1/2" Ice	1.356	1.356	0.036
			0'			1" Ice	1.532	1.532	0.055
						2" Ice	1.914	1.914	0.101
DC6-48-60-18-8F	A	From Leg	4.000	0.000	145'	No Ice	0.850	0.850	0.019
			0'			1/2" Ice	1.356	1.356	0.036
			0'			1" Ice	1.532	1.532	0.055
						2" Ice	1.914	1.914	0.101
8' x 2" Pipe Mount	A	From Leg	4.000	0.000	145'	No Ice	1.900	1.900	0.029
			0'			1/2" Ice	2.728	2.728	0.044
			0'			1" Ice	3.401	3.401	0.063
						2" Ice	4.396	4.396	0.119
8' x 2" Pipe Mount	B	From Leg	4.000	0.000	145'	No Ice	1.900	1.900	0.029
			0'			1/2" Ice	2.728	2.728	0.044
			0'			1" Ice	3.401	3.401	0.063
						2" Ice	4.396	4.396	0.119

Description	Face or Leg	Offset Type	Offsets: Horz Lateral Vert ft ft ft	Azimuth Adjustment °	Placement ft		C_AA_A Front ft^2	C_AA_A Side ft^2	Weight K
8' x 2" Pipe Mount	C	From Leg	4.000 0' 0'	0.000	145'	No Ice 1/2" Ice 1" Ice 2" Ice	1.900 2.728 3.401 4.396	1.900 2.728 3.401 4.396	0.029 0.044 0.063 0.119
Pipe Mount [PM 601-3]	C	None		0.000	145'	No Ice 1/2" Ice 1" Ice 2" Ice	3.170 3.790 4.420 5.760	3.170 3.790 4.420 5.760	0.195 0.232 0.279 0.401
Sector Mount [SM 702-3]	C	None		0.000	145'	No Ice 1/2" Ice 1" Ice 2" Ice	38.890 50.400 61.770 84.350	38.890 50.400 61.770 84.350	1.551 2.279 3.217 5.705
*									
Pipe Mount [PM 601-1]	C	From Leg	0.500 0' 0'	0.000	139'	No Ice 1/2" Ice 1" Ice 2" Ice	1.320 1.580 1.840 2.400	1.320 1.580 1.840 2.400	0.065 0.077 0.093 0.134
*									
LNX-6514DS-A1M w/ Mount Pipe	A	From Leg	4.000 0' 1'	0.000	130'	No Ice 1/2" Ice 1" Ice 2" Ice	4.095 4.485 4.885 5.712	3.296 3.675 4.064 4.869	0.065 0.128 0.202 0.383
LNX-6514DS-A1M w/ Mount Pipe	B	From Leg	4.000 0' 1'	0.000	130'	No Ice 1/2" Ice 1" Ice 2" Ice	4.095 4.485 4.885 5.712	3.296 3.675 4.064 4.869	0.065 0.128 0.202 0.383
LNX-6514DS-A1M w/ Mount Pipe	C	From Leg	4.000 0' 1'	0.000	130'	No Ice 1/2" Ice 1" Ice 2" Ice	4.095 4.485 4.885 5.712	3.296 3.675 4.064 4.869	0.065 0.128 0.202 0.383
X7C-665-2 w/ Mount Pipe	A	From Leg	4.000 0' 1'	0.000	130'	No Ice 1/2" Ice 1" Ice 2" Ice	7.546 8.242 8.955 10.429	5.661 6.331 7.018 8.440	0.069 0.133 0.208 0.392
X7C-665-2 w/ Mount Pipe	B	From Leg	4.000 0' 1'	0.000	130'	No Ice 1/2" Ice 1" Ice 2" Ice	7.546 8.242 8.955 10.429	5.661 6.331 7.018 8.440	0.069 0.133 0.208 0.392
X7C-680-2 w/ Mount Pipe	C	From Leg	4.000 0' 1'	0.000	130'	No Ice 1/2" Ice 1" Ice 2" Ice	7.281 7.954 8.642 10.066	5.911 6.565 7.235 8.620	0.068 0.133 0.210 0.396
HBXX-6516DS-A2M w/ Mount Pipe	A	From Leg	4.000 0' 1'	0.000	130'	No Ice 1/2" Ice 1" Ice 2" Ice	5.180 5.701 6.239 7.361	3.970 4.468 4.981 6.056	0.050 0.094 0.147 0.280
HBXX-6516DS-A2M w/ Mount Pipe	B	From Leg	4.000 0' 1'	0.000	130'	No Ice 1/2" Ice 1" Ice 2" Ice	5.180 5.701 6.239 7.361	3.970 4.468 4.981 6.056	0.050 0.094 0.147 0.280
HBXX-6516DS-A2M w/ Mount Pipe	C	From Leg	4.000 0' 1'	0.000	130'	No Ice 1/2" Ice 1" Ice 2" Ice	5.180 5.701 6.239 7.361	3.970 4.468 4.981 6.056	0.050 0.094 0.147 0.280
SBNHH-1D65B w/ Mount Pipe	A	From Leg	4.000 0' 1'	0.000	130'	No Ice 1/2" Ice 1" Ice	4.095 4.486 4.887	3.296 3.676 4.066	0.066 0.130 0.204

Description	Face or Leg	Offset Type	Offsets: Horz Lateral Vert ft ft ft	Azimuth Adjustment °	Placement ft		C_AA_A Front ft^2	C_AA_A Side ft^2	Weight K
						2" Ice	5.715	4.872	0.386
SBNHH-1D65B w/ Mount Pipe	B	From Leg	4.000 0' 1'	0.000	130'	No Ice 1/2" Ice 1" Ice 2" Ice	4.095 4.486 4.887 5.715	3.296 3.676 4.066 4.872	0.066 0.130 0.204 0.386
SBNHH-1D65B w/ Mount Pipe	C	From Leg	4.000 0' 1'	0.000	130'	No Ice 1/2" Ice 1" Ice 2" Ice	4.095 4.486 4.887 5.715	3.296 3.676 4.066 4.872	0.066 0.130 0.204 0.386
DB-B1-6C-12AB-0Z	A	From Leg	4.000 0' 1'	0.000	130'	No Ice 1/2" Ice 1" Ice 2" Ice	3.364 3.597 3.838 4.343	2.192 2.395 2.606 3.049	0.021 0.050 0.082 0.158
DB-B1-6C-12AB-0Z	C	From Leg	4.000 0' 1'	0.000	130'	No Ice 1/2" Ice 1" Ice 2" Ice	3.364 3.597 3.838 4.343	2.192 2.395 2.606 3.049	0.021 0.050 0.082 0.158
RRH2X60-AWS	A	From Leg	4.000 0' 1'	0.000	130'	No Ice 1/2" Ice 1" Ice 2" Ice	3.500 3.761 4.029 4.585	1.816 2.052 2.289 2.785	0.060 0.083 0.109 0.173
RRH2X60-AWS	B	From Leg	4.000 0' 1'	0.000	130'	No Ice 1/2" Ice 1" Ice 2" Ice	3.500 3.761 4.029 4.585	1.816 2.052 2.289 2.785	0.060 0.083 0.109 0.173
RRH2X60-AWS	C	From Leg	4.000 0' 1'	0.000	130'	No Ice 1/2" Ice 1" Ice 2" Ice	3.500 3.761 4.029 4.585	1.816 2.052 2.289 2.785	0.060 0.083 0.109 0.173
5' x 2" Pipe Mount	A	From Leg	4.000 0' 0'	0.000	130'	No Ice 1/2" Ice 1" Ice 2" Ice	1.188 1.496 1.807 2.458	1.188 1.496 1.807 2.458	0.018 0.027 0.040 0.076
5' x 2" Pipe Mount	B	From Leg	4.000 0' 0'	0.000	130'	No Ice 1/2" Ice 1" Ice 2" Ice	1.188 1.496 1.807 2.458	1.188 1.496 1.807 2.458	0.018 0.027 0.040 0.076
5' x 2" Pipe Mount	C	From Leg	4.000 0' 0'	0.000	130'	No Ice 1/2" Ice 1" Ice 2" Ice	1.188 1.496 1.807 2.458	1.188 1.496 1.807 2.458	0.018 0.027 0.040 0.076
Pipe Mount [PM 601-3]	C	None		0.000	130'	No Ice 1/2" Ice 1" Ice 2" Ice	3.170 3.790 4.420 5.760	3.170 3.790 4.420 5.760	0.195 0.232 0.279 0.401
Sector Mount [SM 702-3]	C	None		0.000	130'	No Ice 1/2" Ice 1" Ice 2" Ice	38.890 50.400 61.770 84.350	38.890 50.400 61.770 84.350	1.551 2.279 3.217 5.705
*									
MX08FRO665-21 w/ Mount Pipe	A	From Leg	4.000 0' 0'	0.000	122'	No Ice 1/2" Ice 1" Ice 2" Ice	8.009 8.518 9.038 10.109	4.233 4.689 5.156 6.122	0.108 0.194 0.292 0.522
MX08FRO665-21 w/ Mount Pipe	B	From Leg	4.000 0' 0'	0.000	122'	No Ice 1/2" Ice 1" Ice	8.009 8.518 9.038	4.233 4.689 5.156	0.108 0.194 0.292

Description	Face or Leg	Offset Type	Offsets: Horz Lateral Vert ft ft ft	Azimuth Adjustment °	Placement ft		C_AA_A Front ft^2	C_AA_A Side ft^2	Weight K
						2" Ice	10.109	6.122	0.522
MX08FRO665-21 w/ Mount Pipe	C	From Leg	4.000 0' 0'	0.000	122'	No Ice 1/2" Ice 1" Ice 2" Ice	8.009 8.518 9.038 10.109	4.233 4.689 5.156 6.122	0.108 0.194 0.292 0.522
TA08025-B604	A	From Leg	4.000 0' 0'	0.000	122'	No Ice 1/2" Ice 1" Ice 2" Ice	1.964 2.138 2.320 2.705	0.981 1.112 1.250 1.548	0.064 0.081 0.100 0.148
TA08025-B604	B	From Leg	4.000 0' 0'	0.000	122'	No Ice 1/2" Ice 1" Ice 2" Ice	1.964 2.138 2.320 2.705	0.981 1.112 1.250 1.548	0.064 0.081 0.100 0.148
TA08025-B604	C	From Leg	4.000 0' 0'	0.000	122'	No Ice 1/2" Ice 1" Ice 2" Ice	1.964 2.138 2.320 2.705	0.981 1.112 1.250 1.548	0.064 0.081 0.100 0.148
TA08025-B605	A	From Leg	4.000 0' 0'	0.000	122'	No Ice 1/2" Ice 1" Ice 2" Ice	1.964 2.138 2.320 2.705	1.129 1.267 1.411 1.723	0.075 0.093 0.114 0.164
TA08025-B605	B	From Leg	4.000 0' 0'	0.000	122'	No Ice 1/2" Ice 1" Ice 2" Ice	1.964 2.138 2.320 2.705	1.129 1.267 1.411 1.723	0.075 0.093 0.114 0.164
TA08025-B605	C	From Leg	4.000 0' 0'	0.000	122'	No Ice 1/2" Ice 1" Ice 2" Ice	1.964 2.138 2.320 2.705	1.129 1.267 1.411 1.723	0.075 0.093 0.114 0.164
RDIDC-9181-PF-48	A	From Leg	4.000 0' 0'	0.000	122'	No Ice 1/2" Ice 1" Ice 2" Ice	2.012 2.189 2.373 2.763	1.168 1.311 1.461 1.784	0.022 0.040 0.060 0.110
(2) 8' x 2" Mount Pipe	A	From Leg	4.000 0' 0'	0.000	122'	No Ice 1/2" Ice 1" Ice 2" Ice	1.900 2.728 3.401 4.396	1.900 2.728 3.401 4.396	0.029 0.044 0.063 0.119
(2) 8' x 2" Mount Pipe	B	From Leg	4.000 0' 0'	0.000	122'	No Ice 1/2" Ice 1" Ice 2" Ice	1.900 2.728 3.401 4.396	1.900 2.728 3.401 4.396	0.029 0.044 0.063 0.119
(2) 8' x 2" Mount Pipe	C	From Leg	4.000 0' 0'	0.000	122'	No Ice 1/2" Ice 1" Ice 2" Ice	1.900 2.728 3.401 4.396	1.900 2.728 3.401 4.396	0.029 0.044 0.063 0.119
Commscope MTC3975083 (3)	C	None		0.000	122'	No Ice 1/2" Ice 1" Ice 2" Ice	23.850 34.120 44.390 64.930	23.850 34.120 44.390 64.930	1.260 1.803 2.345 3.431
*									
ANT150F2	A	From Face	4.000 0' 2'	0.000	104'	No Ice 1/2" Ice 1" Ice 2" Ice	1.227 1.530 1.842 2.494	1.227 1.530 1.842 2.494	0.013 0.022 0.035 0.072
AO8610-5T0	A	From Face	4.000 0' 8'	0.000	104'	No Ice 1/2" Ice 1" Ice	3.960 5.638 7.333	3.960 5.638 7.333	0.041 0.071 0.111

Description	Face or Leg	Offset Type	Offsets: Horz Lateral Vert ft ft ft	Azimuth Adjustment °	Placement ft		C_AA_A Front ft^2	C_AA_A Side ft^2	Weight K
						2" Ice	10.773	10.773	0.223
K751221	A	From Face	4.000	0.000	104'	No Ice	0.314	0.314	0.004
			0'			1/2" Ice	0.445	0.445	0.008
			3'			1" Ice	0.585	0.585	0.013
						2" Ice	0.894	0.894	0.028
SRL-210C-4	B	From Face	4.000	0.000	104'	No Ice	1.000	1.000	0.059
			0'			1/2" Ice	1.800	1.800	0.077
			10'			1" Ice	2.600	2.600	0.094
						2" Ice	4.200	4.200	0.130
ANT150F6	B	From Face	4.000	0.000	104'	No Ice	4.800	4.800	0.030
			0'			1/2" Ice	6.828	6.828	0.066
			12'			1" Ice	8.873	8.873	0.114
						2" Ice	13.013	13.013	0.249
PD220-5	B	From Face	4.000	0.000	104'	No Ice	6.050	6.050	0.023
			0'			1/2" Ice	8.281	8.281	0.067
			13'			1" Ice	10.529	10.529	0.125
						2" Ice	15.075	15.075	0.283
AO8610-5T0	C	From Face	4.000	0.000	104'	No Ice	3.960	3.960	0.041
			0'			1/2" Ice	5.638	5.638	0.071
			8'			1" Ice	7.333	7.333	0.111
						2" Ice	10.773	10.773	0.223
10191	C	From Face	4.000	0.000	104'	No Ice	0.640	0.640	0.005
			0'			1/2" Ice	0.941	0.941	0.010
			2'			1" Ice	1.191	1.191	0.018
						2" Ice	1.720	1.720	0.043
DB540K-F	C	From Face	4.000	0.000	104'	No Ice	4.500	4.500	0.066
			0'			1/2" Ice	6.329	6.329	0.099
			9'			1" Ice	8.175	8.175	0.144
						2" Ice	11.917	11.917	0.268
(4) 6' x 2" Mount Pipe	A	From Face	4.000	0.000	104'	No Ice	1.425	1.425	0.022
			0'			1/2" Ice	1.925	1.925	0.033
			0'			1" Ice	2.294	2.294	0.048
						2" Ice	3.060	3.060	0.090
(4) 6' x 2" Mount Pipe	B	From Face	4.000	0.000	104'	No Ice	1.425	1.425	0.022
			0'			1/2" Ice	1.925	1.925	0.033
			0'			1" Ice	2.294	2.294	0.048
						2" Ice	3.060	3.060	0.090
(4) 6' x 2" Mount Pipe	C	From Face	4.000	0.000	104'	No Ice	1.425	1.425	0.022
			0'			1/2" Ice	1.925	1.925	0.033
			0'			1" Ice	2.294	2.294	0.048
						2" Ice	3.060	3.060	0.090
6' x 2.375" Mount Pipe	C	From Face	4.000	0.000	104'	No Ice	1.425	1.425	0.041
			0'			1/2" Ice	1.925	1.925	0.051
			0'			1" Ice	2.294	2.294	0.066
						2" Ice	3.060	3.060	0.109
6' x 2.375" Mount Pipe	A	From Face	4.000	0.000	104'	No Ice	1.425	1.425	0.041
			0'			1/2" Ice	1.925	1.925	0.051
			0'			1" Ice	2.294	2.294	0.066
						2" Ice	3.060	3.060	0.109
Sabre 30' Specialty Platform	C	None		0.000	104'	No Ice	75.000	75.000	3.020
						1/2" Ice	87.000	87.000	3.620
						1" Ice	99.000	99.000	4.220
						2" Ice	123.000	123.000	5.420
*									
ERICSSON AIR 21 B4A B2P	A	From Leg	4.000	0.000	96'	No Ice	3.193	1.977	0.090
			0'			1/2" Ice	3.518	2.281	0.132
			1'			1" Ice	3.852	2.593	0.179

Description	Face or Leg	Offset Type	Offsets: Horz Lateral Vert ft ft ft	Azimuth Adjustment °	Placement ft		C_AA_A Front ft^2	C_AA_A Side ft^2	Weight K
						2" Ice	4.549	3.246	0.289
ERICSSON AIR 21 B4A B2P	B	From Leg	4.000 0' 1'	0.000	96'	No Ice	3.193	1.977	0.090
						1/2" Ice	3.518	2.281	0.132
						1" Ice	3.852	2.593	0.179
						2" Ice	4.549	3.246	0.289
ERICSSON AIR 21 B4A B2P	C	From Leg	4.000 0' 1'	0.000	96'	No Ice	3.193	1.977	0.090
						1/2" Ice	3.518	2.281	0.132
						1" Ice	3.852	2.593	0.179
						2" Ice	4.549	3.246	0.289
APXVAARR24_43-U-NA20 w/ Mount Pipe	A	From Leg	4.000 0' 1'	0.000	96'	No Ice	14.694	6.873	0.186
						1/2" Ice	15.455	7.554	0.315
						1" Ice	16.230	8.247	0.458
						2" Ice	17.816	9.670	0.788
APXVAARR24_43-U-NA20 w/ Mount Pipe	B	From Leg	4.000 0' 1'	0.000	96'	No Ice	14.694	6.873	0.186
						1/2" Ice	15.455	7.554	0.315
						1" Ice	16.230	8.247	0.458
						2" Ice	17.816	9.670	0.788
APXVAARR24_43-U-NA20 w/ Mount Pipe	C	From Leg	4.000 0' 1'	0.000	96'	No Ice	14.694	6.873	0.186
						1/2" Ice	15.455	7.554	0.315
						1" Ice	16.230	8.247	0.458
						2" Ice	17.816	9.670	0.788
RRUS 11 B2	A	From Leg	4.000 0' 1'	0.000	96'	No Ice	2.833	1.182	0.051
						1/2" Ice	3.043	1.330	0.072
						1" Ice	3.259	1.485	0.095
						2" Ice	3.715	1.826	0.153
RRUS 11 B2	B	From Leg	4.000 0' 1'	0.000	96'	No Ice	2.833	1.182	0.051
						1/2" Ice	3.043	1.330	0.072
						1" Ice	3.259	1.485	0.095
						2" Ice	3.715	1.826	0.153
RRUS 11 B2	C	From Leg	4.000 0' 1'	0.000	96'	No Ice	2.833	1.182	0.051
						1/2" Ice	3.043	1.330	0.072
						1" Ice	3.259	1.485	0.095
						2" Ice	3.715	1.826	0.153
ATM1900D-1A20	A	From Leg	4.000 0' 1'	0.000	96'	No Ice	0.717	0.192	0.008
						1/2" Ice	0.824	0.255	0.013
						1" Ice	0.938	0.326	0.020
						2" Ice	1.189	0.494	0.039
ATM1900D-1A20	B	From Leg	4.000 0' 1'	0.000	96'	No Ice	0.717	0.192	0.008
						1/2" Ice	0.824	0.255	0.013
						1" Ice	0.938	0.326	0.020
						2" Ice	1.189	0.494	0.039
ATM1900D-1A20	C	From Leg	4.000 0' 1'	0.000	96'	No Ice	0.717	0.192	0.008
						1/2" Ice	0.824	0.255	0.013
						1" Ice	0.938	0.326	0.020
						2" Ice	1.189	0.494	0.039
RADIO 4449 B12/B71	A	From Leg	4.000 0' 1'	0.000	96'	No Ice	1.650	1.163	0.074
						1/2" Ice	1.810	1.301	0.090
						1" Ice	1.978	1.447	0.109
						2" Ice	2.336	1.762	0.155
RADIO 4449 B12/B71	B	From Leg	4.000 0' 1'	0.000	96'	No Ice	1.650	1.163	0.074
						1/2" Ice	1.810	1.301	0.090
						1" Ice	1.978	1.447	0.109
						2" Ice	2.336	1.762	0.155
RADIO 4449 B12/B71	C	From Leg	4.000 0' 1'	0.000	96'	No Ice	1.650	1.163	0.074
						1/2" Ice	1.810	1.301	0.090
						1" Ice	1.978	1.447	0.109
						2" Ice	2.336	1.762	0.155

Description	Face or Leg	Offset Type	Offsets: Horz Lateral Vert ft ft ft	Azimuth Adjustment °	Placement ft		C_AA_A Front ft^2	C_AA_A Side ft^2	Weight K
Sector Mount [SM 403-3]	C	None		0.000	96'	No Ice	19.400	19.400	0.873
						1/2" Ice	27.200	27.200	1.244
						1" Ice	34.930	34.930	1.744
						2" Ice	50.180	50.180	3.131
*									
Side Arm Mount [SO 201-1]	C	From Leg	0.500 0' 0'	0.000	87'	No Ice	1.780	2.610	0.096
						1/2" Ice	2.240	3.150	0.116
						1" Ice	2.750	3.730	0.144
						2" Ice	3.890	4.990	0.221
*									
GPS-TMG-HR-26N	C	From Leg	3.000 0' 2'	0.000	71'	No Ice	0.208	0.133	0.001
						1/2" Ice	0.268	0.183	0.003
						1" Ice	0.334	0.239	0.006
						2" Ice	0.490	0.375	0.017
6' x 2" Mount Pipe	C	From Leg	3.000 0' 0'	0.000	71'	No Ice	1.425	1.425	0.022
						1/2" Ice	1.925	1.925	0.033
						1" Ice	2.294	2.294	0.048
						2" Ice	3.060	3.060	0.090
Side Arm Mount [SO 601-1]	C	From Leg	1.500 0' 0'	0.000	71'	No Ice	1.040	5.320	0.159
						1/2" Ice	1.410	6.430	0.196
						1" Ice	1.780	7.670	0.241
						2" Ice	2.520	10.670	0.359
*									
*									
*									
*									
*									
*									
*									
*									
*									
*									
*									
*									

Dishes

Description	Face or Leg	Dish Type	Offset Type	Offsets: Horz Lateral Vert ft	Azimuth Adjustment °	3 dB Beam Width °	Elevation ft	Outside Diameter ft		Aperture Area ft^2	Weight K
Andrew PAR6-59A	C	Paraboloid w/Radome	From Leg	0.500 0' -1'	11.000		139'	6.000	No Ice	28.274	0.143
									1/2" Ice	29.065	0.292
									1" Ice	29.856	0.441
									2" Ice	31.438	0.740
*											
COMMSCOPE VHLPX4-11W-6WH	C	Paraboloid w/Shroud (HP)	From Face	4.000 0' 2'	-19.000		104'	4.108	No Ice	13.256	0.088
									1/2" Ice	13.800	0.159
									1" Ice	14.343	0.230
									2" Ice	15.429	0.371

Description	Face or Leg	Dish Type	Offset Type	Offsets: Horz Lateral Vert ft	Azimuth Adjustment °	3 dB Beam Width °	Elevation ft	Outside Diameter ft		Aperture Area ft^2	Weight K
COMMSCOPE VHLPX4-11W-6WH	A	Paraboloid w/Shroud (HP)	From Face	4.000 0' 2'	1.000		104'	4.108	No Ice 1/2" Ice 1" Ice 2" Ice	13.256 13.800 14.343 15.429	0.088 0.159 0.230 0.371
*											
PR-950	C	Grid	From Leg	1.500 0' 0'	1.000		87'	5.667	No Ice 1/2" Ice 1" Ice 2" Ice	25.220 25.967 26.714 28.209	0.038 0.171 0.305 0.571
*											

Load Combinations

Comb. No.	Description
1	Dead Only
2	1.2 Dead+1.0 Wind 0 deg - No Ice
3	0.9 Dead+1.0 Wind 0 deg - No Ice
4	1.2 Dead+1.0 Wind 30 deg - No Ice
5	0.9 Dead+1.0 Wind 30 deg - No Ice
6	1.2 Dead+1.0 Wind 60 deg - No Ice
7	0.9 Dead+1.0 Wind 60 deg - No Ice
8	1.2 Dead+1.0 Wind 90 deg - No Ice
9	0.9 Dead+1.0 Wind 90 deg - No Ice
10	1.2 Dead+1.0 Wind 120 deg - No Ice
11	0.9 Dead+1.0 Wind 120 deg - No Ice
12	1.2 Dead+1.0 Wind 150 deg - No Ice
13	0.9 Dead+1.0 Wind 150 deg - No Ice
14	1.2 Dead+1.0 Wind 180 deg - No Ice
15	0.9 Dead+1.0 Wind 180 deg - No Ice
16	1.2 Dead+1.0 Wind 210 deg - No Ice
17	0.9 Dead+1.0 Wind 210 deg - No Ice
18	1.2 Dead+1.0 Wind 240 deg - No Ice
19	0.9 Dead+1.0 Wind 240 deg - No Ice
20	1.2 Dead+1.0 Wind 270 deg - No Ice
21	0.9 Dead+1.0 Wind 270 deg - No Ice
22	1.2 Dead+1.0 Wind 300 deg - No Ice
23	0.9 Dead+1.0 Wind 300 deg - No Ice
24	1.2 Dead+1.0 Wind 330 deg - No Ice
25	0.9 Dead+1.0 Wind 330 deg - No Ice
26	1.2 Dead+1.0 Ice+1.0 Temp
27	1.2 Dead+1.0 Wind 0 deg+1.0 Ice+1.0 Temp
28	1.2 Dead+1.0 Wind 30 deg+1.0 Ice+1.0 Temp
29	1.2 Dead+1.0 Wind 60 deg+1.0 Ice+1.0 Temp
30	1.2 Dead+1.0 Wind 90 deg+1.0 Ice+1.0 Temp
31	1.2 Dead+1.0 Wind 120 deg+1.0 Ice+1.0 Temp
32	1.2 Dead+1.0 Wind 150 deg+1.0 Ice+1.0 Temp
33	1.2 Dead+1.0 Wind 180 deg+1.0 Ice+1.0 Temp
34	1.2 Dead+1.0 Wind 210 deg+1.0 Ice+1.0 Temp
35	1.2 Dead+1.0 Wind 240 deg+1.0 Ice+1.0 Temp
36	1.2 Dead+1.0 Wind 270 deg+1.0 Ice+1.0 Temp
37	1.2 Dead+1.0 Wind 300 deg+1.0 Ice+1.0 Temp
38	1.2 Dead+1.0 Wind 330 deg+1.0 Ice+1.0 Temp
39	Dead+Wind 0 deg - Service
40	Dead+Wind 30 deg - Service
41	Dead+Wind 60 deg - Service

Comb. No.	Description
42	Dead+Wind 90 deg - Service
43	Dead+Wind 120 deg - Service
44	Dead+Wind 150 deg - Service
45	Dead+Wind 180 deg - Service
46	Dead+Wind 210 deg - Service
47	Dead+Wind 240 deg - Service
48	Dead+Wind 270 deg - Service
49	Dead+Wind 300 deg - Service
50	Dead+Wind 330 deg - Service

Maximum Member Forces

Section No.	Elevation ft	Component Type	Condition	Gov. Load Comb.	Axial K	Major Axis Moment kip-ft	Minor Axis Moment kip-ft
T1	170 - 160	Leg	Max Tension	23	4.300	-1.078	0.020
			Max. Compression	18	-7.736	-0.312	-0.037
			Max. Mx	14	-0.016	2.307	-0.020
			Max. My	8	-1.641	-0.044	-2.262
			Max. Vy	6	-1.238	0.000	0.000
			Max. Vx	12	-1.275	0.000	0.000
		Diagonal	Max Tension	4	3.333	0.000	0.000
			Max. Compression	16	-3.354	0.000	0.000
			Max. Mx	32	0.363	0.051	0.006
			Max. My	30	-0.871	0.049	-0.007
			Max. Vy	32	0.050	0.051	0.006
			Max. Vx	30	0.003	0.000	0.000
		Top Girt	Max Tension	19	0.248	0.000	0.000
			Max. Compression	14	-0.291	0.000	0.000
			Max. Mx	26	-0.077	-0.141	0.000
			Max. My	26	-0.074	0.000	0.004
			Max. Vy	26	0.071	0.000	0.000
			Max. Vx	26	-0.002	0.000	0.000
T2	160 - 140	Leg	Max Tension	15	31.017	-1.419	0.025
			Max. Compression	18	-40.935	0.864	-0.106
			Max. Mx	22	18.211	-1.532	0.181
			Max. My	21	-1.678	-0.033	1.507
			Max. Vy	22	-1.747	-1.532	0.181
			Max. Vx	12	-1.744	0.027	0.356
		Diagonal	Max Tension	8	8.793	0.000	0.000
			Max. Compression	20	-8.889	0.000	0.000
			Max. Mx	36	1.708	0.109	-0.012
			Max. My	22	-7.787	0.030	0.017
			Max. Vy	33	0.083	0.105	-0.014
			Max. Vx	37	-0.005	0.000	0.000
T3	140 - 120	Leg	Max Tension	7	75.895	-1.530	0.036
			Max. Compression	18	-95.003	1.372	-0.004
			Max. Mx	14	56.172	1.959	0.005
			Max. My	24	-9.097	-0.101	-1.949
			Max. Vy	14	1.120	-1.584	0.005
			Max. Vx	20	1.190	-0.113	-1.848
		Diagonal	Max Tension	8	12.756	0.000	0.000
			Max. Compression	8	-12.897	0.000	0.000
			Max. Mx	35	2.078	0.173	-0.020
			Max. My	10	-11.093	0.033	-0.022
			Max. Vy	33	0.111	0.162	0.019
			Max. Vx	32	0.006	0.000	0.000
T4	120 - 100	Leg	Max Tension	15	130.846	-1.525	0.005
			Max. Compression	10	-160.765	4.329	-0.187

Section No.	Elevation ft	Component Type	Condition	Gov. Load Comb.	Axial K	Major Axis Moment kip-ft	Minor Axis Moment kip-ft
			Max. Mx	3	-155.873	4.349	0.138
			Max. My	12	-12.613	-0.106	-4.096
			Max. Vy	22	1.440	-4.309	0.186
			Max. Vx	24	1.539	0.013	1.128
		Diagonal	Max Tension	4	15.516	0.000	0.000
			Max. Compression	4	-15.693	0.000	0.000
			Max. Mx	35	2.697	0.230	0.028
			Max. My	37	-2.999	0.212	0.030
			Max. Vy	33	0.141	0.228	-0.029
			Max. Vx	37	-0.007	0.000	0.000
T5	100 - 80	Leg	Max Tension	15	192.757	-2.140	-0.170
			Max. Compression	10	-231.538	3.814	-0.268
			Max. Mx	3	-185.793	4.349	0.138
			Max. My	12	-12.996	-0.106	-4.096
			Max. Vy	22	-1.118	-4.309	0.186
			Max. Vx	24	0.993	-0.051	4.085
		Diagonal	Max Tension	4	20.943	0.000	0.000
			Max. Compression	4	-21.079	0.000	0.000
			Max. Mx	35	3.722	0.479	-0.056
			Max. My	10	-19.610	-0.012	-0.061
			Max. Vy	33	0.220	0.440	-0.058
			Max. Vx	32	0.012	0.000	0.000
T6	80 - 60	Leg	Max Tension	15	261.343	-3.331	-0.022
			Max. Compression	2	-310.146	4.565	0.044
			Max. Mx	2	-310.146	4.565	0.044
			Max. My	12	-20.239	0.014	-4.403
			Max. Vy	2	-0.420	4.565	0.044
			Max. Vx	12	0.641	-0.197	-3.871
		Diagonal	Max Tension	4	22.278	0.000	0.000
			Max. Compression	4	-22.481	0.000	0.000
			Max. Mx	35	3.887	0.612	-0.072
			Max. My	33	-4.565	0.517	-0.075
			Max. Vy	33	0.270	0.586	0.070
			Max. Vx	33	0.014	0.000	0.000
T7	60 - 40	Leg	Max Tension	15	328.352	-6.312	-0.014
			Max. Compression	2	-389.310	7.411	-0.003
			Max. Mx	2	-389.310	7.411	-0.003
			Max. My	12	-23.628	-0.186	-6.092
			Max. Vy	22	0.538	-6.273	0.073
			Max. Vx	12	0.525	-0.186	-6.092
		Diagonal	Max Tension	4	23.547	0.000	0.000
			Max. Compression	2	-24.079	0.000	0.000
			Max. Mx	33	3.039	0.687	-0.085
			Max. My	33	-5.063	0.631	-0.086
			Max. Vy	33	0.293	0.687	-0.085
			Max. Vx	33	0.015	0.000	0.000
T8	40 - 20	Leg	Max Tension	15	393.616	-8.564	-0.041
			Max. Compression	2	-467.770	1.630	-0.705
			Max. Mx	14	353.809	-8.628	-0.047
			Max. My	12	-27.443	-0.301	-11.612
			Max. Vy	2	1.004	8.555	0.064
			Max. Vx	12	0.917	-0.301	-11.612
		Diagonal	Max Tension	4	25.317	0.000	0.000
			Max. Compression	2	-26.567	0.000	0.000
			Max. Mx	33	3.354	0.801	0.095
			Max. My	32	3.619	0.800	-0.099
			Max. Vy	33	0.313	0.801	0.095
			Max. Vx	32	0.016	0.000	0.000
T9	20 - 0	Leg	Max Tension	15	438.312	0.489	-0.282
			Max. Compression	2	-523.334	0.000	0.000
			Max. Mx	2	-523.293	21.305	-0.587

Section No.	Elevation ft	Component Type	Condition	Gov. Load Comb.	Axial K	Major Axis Moment kip-ft	Minor Axis Moment kip-ft
			Max. My	12	-31.800	-2.021	-11.305
			Max. Vy	10	-5.196	21.235	0.467
			Max. Vx	12	-2.815	-2.021	-11.305
		Diagonal	Max Tension	5	31.906	-0.024	-0.021
			Max. Compression	2	-34.851	0.000	0.000
			Max. Mx	12	-18.489	0.400	-0.029
			Max. My	37	-2.063	0.157	0.052
			Max. Vy	30	-0.159	0.242	0.052
			Max. Vx	31	0.011	0.000	0.000
		Horizontal	Max Tension	2	24.002	-0.272	-0.044
			Max. Compression	2	-25.174	-0.291	-0.053
			Max. Mx	33	0.682	-0.537	-0.003
			Max. My	2	4.010	-0.219	0.129
			Max. Vy	33	-0.229	-0.503	-0.015
			Max. Vx	2	0.013	-0.219	0.129
		Redund Horz 1 Bracing	Max Tension	16	6.039	0.000	0.000
			Max. Compression	5	-4.802	0.000	0.000
			Max. Mx	26	0.412	-0.083	0.000
			Max. My	26	0.467	0.000	0.002
			Max. Vy	26	0.055	0.000	0.000
			Max. Vx	26	-0.002	0.000	0.000
		Redund Diag 1 Bracing	Max Tension	5	3.276	0.000	0.000
			Max. Compression	16	-3.726	0.000	0.000
			Max. Mx	26	0.242	-0.093	0.000
			Max. My	26	0.193	0.000	0.004
			Max. Vy	26	-0.049	0.000	0.000
			Max. Vx	26	-0.002	0.000	0.000
		Inner Bracing	Max Tension	3	0.014	0.000	0.000
			Max. Compression	14	-0.034	0.000	0.000
			Max. Mx	26	-0.023	-0.278	0.000
			Max. Vy	26	0.093	0.000	0.000

Maximum Reactions

Location	Condition	Gov. Load Comb.	Vertical K	Horizontal, X K	Horizontal, Z K
Leg C	Max. Vert	18	537.298	58.063	-33.522
	Max. H_x	18	537.298	58.063	-33.522
	Max. H_z	5	-397.992	-42.379	31.911
	Min. Vert	7	-444.410	-50.332	29.020
	Min. H_x	7	-444.410	-50.332	29.020
	Min. H_z	16	466.646	47.013	-34.480
Leg B	Max. Vert	10	555.928	-61.607	-33.983
	Max. H_x	23	-460.306	53.443	29.359
	Max. H_z	25	-414.789	46.172	31.776
	Min. Vert	23	-460.306	53.443	29.359
	Min. H_x	10	555.928	-61.607	-33.983
	Min. H_z	12	485.608	-51.118	-34.561
Leg A	Max. Vert	2	564.237	-1.598	72.278
	Max. H_x	21	29.434	10.428	2.536
	Max. H_z	2	564.237	-1.598	72.278
	Min. Vert	15	-472.602	1.533	-63.036
	Min. H_x	8	36.636	-10.473	2.919
	Min. H_z	15	-472.602	1.533	-63.036

Location	Condition	Gov. Load Comb.	Vertical K	Horizontal, X K	Horizontal, Z K

Tower Mast Reaction Summary

Load Combination	Vertical K	$Shear_x$ K	$Shear_z$ K	Overturning Moment, M_x kip-ft	Overturning Moment, M_z kip-ft	Torque kip-ft
Dead Only	98.125	0.000	-0.000	27.928	14.239	0.000
1.2 Dead+1.0 Wind 0 deg - No Ice	117.750	-0.048	-122.857	-11366.298	1.344	-69.525
0.9 Dead+1.0 Wind 0 deg - No Ice	88.312	-0.048	-122.857	-11374.677	-2.928	-69.525
1.2 Dead+1.0 Wind 30 deg - No Ice	117.750	56.228	-97.296	-9206.537	-5361.232	-30.929
0.9 Dead+1.0 Wind 30 deg - No Ice	88.312	56.228	-97.296	-9214.916	-5365.504	-30.929
1.2 Dead+1.0 Wind 60 deg - No Ice	117.750	92.797	-52.862	-5037.581	-8928.626	0.161
0.9 Dead+1.0 Wind 60 deg - No Ice	88.312	92.797	-52.862	-5045.959	-8932.898	0.161
1.2 Dead+1.0 Wind 90 deg - No Ice	117.750	108.734	0.357	56.593	-10426.792	20.825
0.9 Dead+1.0 Wind 90 deg - No Ice	88.312	108.734	0.357	48.214	-10431.064	20.825
1.2 Dead+1.0 Wind 120 deg - No Ice	117.750	103.366	59.295	5566.687	-9703.021	58.108
0.9 Dead+1.0 Wind 120 deg - No Ice	88.312	103.366	59.295	5558.309	-9707.292	58.108
1.2 Dead+1.0 Wind 150 deg - No Ice	117.750	60.269	102.984	9597.088	-5618.070	75.271
0.9 Dead+1.0 Wind 150 deg - No Ice	88.312	60.269	102.984	9588.710	-5622.342	75.271
1.2 Dead+1.0 Wind 180 deg - No Ice	117.750	0.447	115.984	10877.855	-20.550	68.809
0.9 Dead+1.0 Wind 180 deg - No Ice	88.312	0.447	115.984	10869.477	-24.822	68.809
1.2 Dead+1.0 Wind 210 deg - No Ice	117.750	-56.153	96.646	9192.168	5377.799	29.860
0.9 Dead+1.0 Wind 210 deg - No Ice	88.312	-56.153	96.646	9183.789	5373.527	29.860
1.2 Dead+1.0 Wind 240 deg - No Ice	117.750	-98.085	56.189	5362.233	9355.318	1.586
0.9 Dead+1.0 Wind 240 deg - No Ice	88.312	-98.085	56.189	5353.854	9351.046	1.586
1.2 Dead+1.0 Wind 270 deg - No Ice	117.750	-108.205	-0.363	8.446	10393.527	-20.211
0.9 Dead+1.0 Wind 270 deg - No Ice	88.312	-108.205	-0.363	0.068	10389.255	-20.211
1.2 Dead+1.0 Wind 300 deg - No Ice	117.750	-97.217	-55.893	-5224.520	9226.630	-57.250
0.9 Dead+1.0 Wind 300 deg - No Ice	88.312	-97.217	-55.893	-5232.899	9222.358	-57.250
1.2 Dead+1.0 Wind 330 deg - No Ice	117.750	-59.904	-103.030	-9537.875	5598.403	-75.227
0.9 Dead+1.0 Wind 330 deg - No Ice	88.312	-59.904	-103.030	-9546.253	5594.131	-75.227
1.2 Dead+1.0 Ice+1.0 Temp	268.053	0.000	-0.000	85.620	40.282	0.000
1.2 Dead+1.0 Wind 0 deg+1.0	268.053	0.171	-24.521	-2242.939	23.270	-7.083

Load Combination	Vertical K	$Shear_x$ K	$Shear_z$ K	Overturning Moment, M_x kip-ft	Overturning Moment, M_z kip-ft	Torque kip-ft
Ice+1.0 Temp						
1.2 Dead+1.0 Wind 30 deg+1.0 Ice+1.0 Temp	268.053	11.662	-19.947	-1841.807	-1090.507	-2.193
1.2 Dead+1.0 Wind 60 deg+1.0 Ice+1.0 Temp	268.053	19.312	-11.040	-991.095	-1849.575	0.562
1.2 Dead+1.0 Wind 90 deg+1.0 Ice+1.0 Temp	268.053	22.680	-0.058	79.919	-2163.256	-0.435
1.2 Dead+1.0 Wind 120 deg+1.0 Ice+1.0 Temp	268.053	21.004	11.859	1214.154	-1965.282	1.990
1.2 Dead+1.0 Wind 150 deg+1.0 Ice+1.0 Temp	268.053	12.208	20.911	2068.282	-1122.363	7.097
1.2 Dead+1.0 Wind 180 deg+1.0 Ice+1.0 Temp	268.053	0.057	23.771	2353.905	35.102	7.550
1.2 Dead+1.0 Wind 210 deg+1.0 Ice+1.0 Temp	268.053	-11.507	19.866	2002.845	1156.230	2.991
1.2 Dead+1.0 Wind 240 deg+1.0 Ice+1.0 Temp	268.053	-19.744	11.330	1183.730	1959.540	-0.284
1.2 Dead+1.0 Wind 270 deg+1.0 Ice+1.0 Temp	268.053	-22.540	-0.063	80.584	2228.905	-0.350
1.2 Dead+1.0 Wind 300 deg+1.0 Ice+1.0 Temp	268.053	-20.237	-11.646	-1026.845	1981.922	-2.457
1.2 Dead+1.0 Wind 330 deg+1.0 Ice+1.0 Temp	268.053	-12.146	-20.925	-1898.761	1194.869	-7.089
Dead+Wind 0 deg - Service	98.125	-0.008	-20.174	-1849.642	11.687	-11.274
Dead+Wind 30 deg - Service	98.125	9.244	-15.995	-1495.536	-872.398	-5.021
Dead+Wind 60 deg - Service	98.125	15.265	-8.698	-808.892	-1461.496	0.015
Dead+Wind 90 deg - Service	98.125	17.884	0.058	31.670	-1708.321	3.364
Dead+Wind 120 deg - Service	98.125	16.979	9.741	939.676	-1587.068	9.412
Dead+Wind 150 deg - Service	98.125	9.899	16.917	1603.853	-914.046	12.199
Dead+Wind 180 deg - Service	98.125	0.072	19.059	1815.425	8.136	11.158
Dead+Wind 210 deg - Service	98.125	-9.231	15.890	1538.193	898.022	4.848
Dead+Wind 240 deg - Service	98.125	-16.123	9.237	906.523	1553.624	0.268
Dead+Wind 270 deg - Service	98.125	-17.798	-0.059	23.863	1725.864	-3.265
Dead+Wind 300 deg - Service	98.125	-15.982	-9.189	-839.205	1532.756	-9.273
Dead+Wind 330 deg - Service	98.125	-9.840	-16.925	-1549.264	933.794	-12.192

Solution Summary

	Sum of Applied Forces			Sum of Reactions			
Load Comb.	PX K	PY K	PZ K	PX K	PY K	PZ K	% Error
1	0.000	-98.125	0.000	-0.000	98.125	0.000	0.000%
2	-0.048	-117.750	-122.857	0.048	117.750	122.857	0.000%
3	-0.048	-88.312	-122.857	0.048	88.312	122.857	0.000%
4	56.228	-117.750	-97.296	-56.228	117.750	97.296	0.000%
5	56.228	-88.312	-97.296	-56.228	88.312	97.296	0.000%
6	92.797	-117.750	-52.862	-92.797	117.750	52.862	0.000%
7	92.797	-88.312	-52.862	-92.797	88.312	52.862	0.000%
8	108.734	-117.750	0.357	-108.734	117.750	-0.357	0.000%
9	108.734	-88.312	0.357	-108.734	88.312	-0.357	0.000%
10	103.366	-117.750	59.295	-103.366	117.750	-59.295	0.000%
11	103.366	-88.312	59.295	-103.366	88.312	-59.295	0.000%
12	60.269	-117.750	102.984	-60.269	117.750	-102.984	0.000%
13	60.269	-88.312	102.984	-60.269	88.312	-102.984	0.000%
14	0.447	-117.750	115.984	-0.447	117.750	-115.984	0.000%
15	0.447	-88.312	115.984	-0.447	88.312	-115.984	0.000%
16	-56.153	-117.750	96.646	56.153	117.750	-96.646	0.000%
17	-56.153	-88.312	96.646	56.153	88.312	-96.646	0.000%

Load Comb.	Sum of Applied Forces PX K	PY K	PZ K	Sum of Reactions PX K	PY K	PZ K	% Error
18	-98.085	-117.750	56.189	98.085	117.750	-56.189	0.000%
19	-98.085	-88.312	56.189	98.085	88.312	-56.189	0.000%
20	-108.205	-117.750	-0.363	108.205	117.750	0.363	0.000%
21	-108.205	-88.312	-0.363	108.205	88.312	0.363	0.000%
22	-97.217	-117.750	-55.893	97.217	117.750	55.893	0.000%
23	-97.217	-88.312	-55.893	97.217	88.312	55.893	0.000%
24	-59.904	-117.750	-103.030	59.904	117.750	103.030	0.000%
25	-59.904	-88.312	-103.030	59.904	88.312	103.030	0.000%
26	0.000	-268.053	0.000	-0.000	268.053	0.000	0.000%
27	0.171	-268.053	-24.521	-0.171	268.053	24.521	0.000%
28	11.662	-268.053	-19.947	-11.662	268.053	19.947	0.000%
29	19.312	-268.053	-11.040	-19.312	268.053	11.040	0.000%
30	22.680	-268.053	-0.058	-22.680	268.053	0.058	0.000%
31	21.004	-268.053	11.859	-21.004	268.053	-11.859	0.000%
32	12.208	-268.053	20.911	-12.208	268.053	-20.911	0.000%
33	0.057	-268.053	23.771	-0.057	268.053	-23.771	0.000%
34	-11.507	-268.053	19.866	11.507	268.053	-19.866	0.000%
35	-19.744	-268.053	11.330	19.744	268.053	-11.330	0.000%
36	-22.540	-268.053	-0.063	22.540	268.053	0.063	0.000%
37	-20.237	-268.053	-11.646	20.237	268.053	11.646	0.000%
38	-12.146	-268.053	-20.925	12.146	268.053	20.925	0.000%
39	-0.008	-98.125	-20.174	0.008	98.125	20.174	0.000%
40	9.244	-98.125	-15.995	-9.244	98.125	15.995	0.000%
41	15.265	-98.125	-8.698	-15.265	98.125	8.698	0.000%
42	17.884	-98.125	0.058	-17.884	98.125	-0.058	0.000%
43	16.979	-98.125	9.741	-16.979	98.125	-9.741	0.000%
44	9.899	-98.125	16.917	-9.899	98.125	-16.917	0.000%
45	0.072	-98.125	19.059	-0.072	98.125	-19.059	0.000%
46	-9.231	-98.125	15.890	9.231	98.125	-15.890	0.000%
47	-16.123	-98.125	9.237	16.123	98.125	-9.237	0.000%
48	-17.798	-98.125	-0.059	17.798	98.125	0.059	0.000%
49	-15.982	-98.125	-9.189	15.982	98.125	9.189	0.000%
50	-9.840	-98.125	-16.925	9.840	98.125	16.925	0.000%

Maximum Tower Deflections - Service Wind

Section No.	Elevation ft	Horz. Deflection in	Gov. Load Comb.	Tilt °	Twist °
T1	170 - 160	1.262	43	0.060	0.014
T2	160 - 140	1.137	43	0.059	0.013
T3	140 - 120	0.894	43	0.054	0.010
T4	120 - 100	0.669	43	0.047	0.007
T5	100 - 80	0.474	39	0.039	0.005
T6	80 - 60	0.314	39	0.031	0.004
T7	60 - 40	0.190	39	0.023	0.003
T8	40 - 20	0.098	39	0.015	0.002
T9	20 - 0	0.036	39	0.008	0.001

Critical Deflections and Radius of Curvature - Service Wind

Elevation ft	Appurtenance	Gov. Load Comb.	Deflection in	Tilt °	Twist °	Radius of Curvature ft
170'	Lightning Rod 5/8" x 5'	43	1.262	0.060	0.014	972466
168'	AIR 6419 B41_TMO	43	1.237	0.060	0.014	972466
160'	6813-2 HW	43	1.137	0.059	0.013	503337
151'	(2) P65.15.XL.0 w/ Mount Pipe	43	1.026	0.057	0.012	317238
145'	800 10122 w/ Mount Pipe	43	0.953	0.055	0.011	257561
139'	Pipe Mount [PM 601-1]	43	0.882	0.054	0.010	219284
138'	Andrew PAR6-59A	43	0.870	0.053	0.010	214674
130'	LNX-6514DS-A1M w/ Mount Pipe	43	0.778	0.050	0.008	183411
122'	MX08FRO665-21 w/ Mount Pipe	43	0.690	0.047	0.007	160396
106'	COMMSCOPE VHLPX4-11W-6WH	43	0.529	0.041	0.006	138060
104'	ANT150F2	43	0.510	0.041	0.006	135911
96'	ERICSSON AIR 21 B4A B2P	39	0.439	0.038	0.005	131023
87'	PR-950	39	0.366	0.034	0.004	129309
71'	GPS-TMG-HR-26N	39	0.254	0.027	0.004	136689

Maximum Tower Deflections - Design Wind

Section No.	Elevation ft	Horz. Deflection in	Gov. Load Comb.	Tilt °	Twist °
T1	170 - 160	7.690	3	0.356	0.084
T2	160 - 140	6.933	3	0.351	0.083
T3	140 - 120	5.462	3	0.325	0.062
T4	120 - 100	4.101	3	0.283	0.044
T5	100 - 80	2.910	3	0.239	0.032
T6	80 - 60	1.928	3	0.190	0.025
T7	60 - 40	1.166	3	0.138	0.019
T8	40 - 20	0.600	3	0.092	0.013
T9	20 - 0	0.217	2	0.046	0.008

Critical Deflections and Radius of Curvature - Design Wind

Elevation ft	Appurtenance	Gov. Load Comb.	Deflection in	Tilt °	Twist °	Radius of Curvature ft
170'	Lightning Rod 5/8" x 5'	3	7.690	0.356	0.084	172147
168'	AIR 6419 B41_TMO	3	7.538	0.355	0.084	172147
160'	6813-2 HW	3	6.933	0.351	0.083	89745
151'	(2) P65.15.XL.0 w/ Mount Pipe	3	6.261	0.342	0.075	58010
145'	800 10122 w/ Mount Pipe	3	5.822	0.333	0.068	46587
139'	Pipe Mount [PM 601-1]	3	5.391	0.323	0.061	39022
138'	Andrew PAR6-59A	3	5.320	0.321	0.060	38027
130'	LNX-6514DS-A1M w/ Mount Pipe	3	4.764	0.305	0.052	31670
122'	MX08FRO665-21 w/ Mount Pipe	3	4.231	0.288	0.046	27181
106'	COMMSCOPE VHLPX4-11W-6WH	3	3.246	0.253	0.035	23235
104'	ANT150F2	3	3.132	0.248	0.034	22865
96'	ERICSSON AIR 21 B4A B2P	3	2.696	0.229	0.031	21893
87'	PR-950	3	2.246	0.207	0.027	21466
71'	GPS-TMG-HR-26N	3	1.559	0.166	0.022	22622

Bolt Design Data

Section No.	Elevation ft	Component Type	Bolt Grade	Bolt Size in	Number Of Bolts	Maximum Load per Bolt K	Allowable Load per Bolt K	Ratio Load / Allowable	Allowable Ratio	Criteria
T1	170	Leg	A325N	1.000	4	1.075	54.517	0.020 ✔	1.05	Bolt Tension
		Diagonal	A325N	0.625	1	3.354	13.806	0.243 ✔	1.05	Bolt Shear
		Top Girt	A325N	0.625	1	0.248	9.914	0.025 ✔	1.05	Member Block Shear
T2	160	Leg	A325N	1.250	4	7.754	87.220	0.089 ✔	1.05	Bolt Tension
		Diagonal	A325N	0.750	1	8.793	18.922	0.465 ✔	1.05	Gusset Bearing
T3	140	Leg	A325N	1.250	6	12.649	87.220	0.145 ✔	1.05	Bolt Tension
		Diagonal	A325N	1.000	1	12.756	20.227	0.631 ✔	1.05	Member Bearing
T4	120	Leg	A325N	1.375	6	21.808	103.939	0.210 ✔	1.05	Bolt Tension
		Diagonal	A325N	1.000	1	15.516	26.970	0.575 ✔	1.05	Member Bearing
T5	100	Leg	A325N	1.375	6	32.126	103.939	0.309 ✔	1.05	Bolt Tension
		Diagonal	A325N	1.125	1	20.943	26.100	0.802 ✔	1.05	Member Bearing
T6	80	Leg	A325N	1.500	6	43.557	126.472	0.344 ✔	1.05	Bolt Tension
		Diagonal	A325N	1.125	1	22.278	32.625	0.683 ✔	1.05	Member Bearing
T7	60	Leg	A325N	1.500	8	41.044	126.472	0.325 ✔	1.05	Bolt Tension
		Diagonal	A325N	1.250	1	23.547	31.538	0.747 ✔	1.05	Member Bearing
T8	40	Leg	A325N	1.500	8	49.202	126.472	0.389 ✔	1.05	Bolt Tension
		Diagonal	A325N	1.250	1	25.317	31.538	0.803 ✔	1.05	Member Bearing
T9	20	Diagonal	A325N	1.000	2	17.426	35.343	0.493 ✔	1.05	Bolt Shear
		Horizontal	A325N	1.000	2	12.001	26.916	0.446 ✔	1.05	Member Block Shear
		Redund Horz 1 Bracing	A325N	1.000	1	9.076	14.953	0.607 ✔	1.05	Member Block Shear
		Redund Diag 1 Bracing	A325N	1.000	1	5.867	11.963	0.490 ✔	1.05	Member Block Shear

Compression Checks

Leg Design Data (Compression)

Section No.	Elevation ft	Size	L ft	L_u ft	Kl/r	A in^2	P_u K	ϕP_n K	Ratio $\frac{P_u}{\phi P_n}$
T1	170 - 160	Sabre 3.5" x 0.216"	10'7/32"	5'3/32"	51.7 K=1.00	2.228	-7.736	82.510	0.094 [1] ✔
T2	160 - 140	Sabre 4.5" x 0.438"	20'13/32"	6'8-1/8"	55.5 K=1.00	5.589	-40.935	200.839	0.204 [1] ✔

Section No.	Elevation ft	Size	L ft	L_u ft	Kl/r	A in^2	P_u K	ϕP_n K	Ratio $\frac{P_u}{\phi P_n}$
T3	140 - 120	Sabre 6.625" x 0.432"	20'13/32"	6'8-1/8"	36.5 K=1.00	8.405	-95.003	343.100	0.277 [1] ✔
T4	120 - 100	Sabre 8.625" x 0.5"	20'13/32"	6'8-1/8"	27.8 K=1.00	12.763	-160.765	542.674	0.296 [1] ✔
T5	100 - 80	Sabre 10.750" x 0.500"	20'13/32"	10'7/32"	33.1 K=1.00	16.101	-231.538	668.659	0.346 [1] ✔
T6	80 - 60	Sabre 12.75" x 0.5"	20'13/32"	10'7/32"	27.7 K=1.00	19.242	-310.146	818.560	0.379 [1] ✔
T7	60 - 40	Sabre 16" x 0.5"	20'13/32"	10'7/32"	21.9 K=1.00	24.347	-389.310	1057.800	0.368 [1] ✔
T8	40 - 20	Sabre 18" x 0.5"	20'13/32"	10'7/32"	19.4 K=1.00	27.489	-467.770	1203.360	0.389 [1] ✔
T9	20 - 0	Sabre 18" x 0.5"	20'13/32"	5'3/32"	9.7 K=1.00	27.489	-523.334	1228.500	0.426 [1] ✔

[1] P_u / ϕP_n controls

Diagonal Design Data (Compression)

Section No.	Elevation ft	Size	L ft	L_u ft	Kl/r	A in^2	P_u K	ϕP_n K	Ratio $\frac{P_u}{\phi P_n}$
T1	170 - 160	L2x2x3/8	10'15/16"	4'10-7/16"	150.2 K=1.00	1.360	-3.354	17.250	0.194 [1] ✔
T2	160 - 140	L3x3x3/8	12'6-31/32"	6'1-7/16"	125.1 K=1.00	2.110	-8.889	38.577	0.230 [1] ✔
T3	140 - 120	L3 1/2x3 1/2x3/8	14'3-25/32"	6'10-13/32"	120.0 K=1.00	2.480	-12.897	48.877	0.264 [1] ✔
T4	120 - 100	L3 1/2x3 1/2x1/2	16'1-11/32"	7'8-1/8"	134.9 K=1.00	3.250	-15.693	51.122	0.307 [1] ✔
T5	100 - 80	L5x5x1/2	19'3-9/16"	9'2-13/16"	114.5 K=1.02	4.750	-21.079	100.449	0.210 [1] ✔
T6	80 - 60	L5x5x5/8	21'3/8"	10'5/32"	122.9 K=1.00	5.860	-22.481	110.813	0.203 [1] ✔
T7	60 - 40	L5x5x5/8	22'9-23/32"	10'8-15/16"	131.8 K=1.00	5.860	-24.079	96.513	0.249 [1] ✔
T8	40 - 20	L5x5x5/8	24'7-1/2"	11'6-13/16"	141.9 K=1.00	5.860	-26.567	83.268	0.319 [1] ✔
T9	20 - 0	L5x5x5/8	16'1/8"	15'19/32"	118.8 K=1.00	5.860	-34.851	117.313	0.297 [1] ✔

[1] P_u / ϕP_n controls

Horizontal Design Data (Compression)

Section No.	Elevation ft	Size	L ft	L_u ft	Kl/r	A in^2	P_u K	ϕP_n K	Ratio $\frac{P_u}{\phi P_n}$
T9	20 - 0	2L3 1/2x3 1/2x1/4x3/8 2L 'a' > 64.466 in - 159	24'	11'3"	155.5 K=1.00	3.380	-25.174	38.299	0.657 [1] ✔

[1] P_u / ϕP_n controls

Top Girt Design Data (Compression)

Section No.	Elevation ft	Size	L ft	L_u ft	Kl/r	A in^2	P_u K	ϕP_n K	Ratio $\frac{P_u}{\phi P_n}$
T1	170 - 160	L2 1/2x2 1/2x3/16	8'	7'5"	179.8 K=1.00	0.902	-0.291	7.986	0.036 [1] ✔

[1] P_u / ϕP_n controls

Redundant Horizontal (1) Design Data (Compression)

Section No.	Elevation ft	Size	L ft	L_u ft	Kl/r	A in^2	P_u K	ϕP_n K	Ratio $\frac{P_u}{\phi P_n}$
T9	20 - 0	L3x3x5/16	6'	5'3"	107.0 K=1.00	1.780	-9.076	41.028	0.221 [1] ✔

[1] P_u / ϕP_n controls

Redundant Diagonal (1) Design Data (Compression)

Section No.	Elevation ft	Size	L ft	L_u ft	Kl/r	A in^2	P_u K	ϕP_n K	Ratio $\frac{P_u}{\phi P_n}$
T9	20 - 0	L3x3x1/4	7'7-7/16' '	6'7-17/3 2"	134.3 K=1.00	1.440	-5.764	22.837	0.252 [1] ✔

[1] P_u / ϕP_n controls

Inner Bracing Design Data (Compression)

Section No.	Elevation ft	Size	L ft	L_u ft	Kl/r	A in^2	P_u K	ϕP_n K	Ratio $\frac{P_u}{\phi P_n}$

Section No.	Elevation ft	Size	L ft	L_u ft	Kl/r	A in^2	P_u K	ϕP_n K	Ratio $\frac{P_u}{\phi P_n}$
T9	20 - 0	L3x3x3/16	12'	12'	241.6 K=1.00	1.090	-0.034	5.344	0.006 [1] ✔

[1] P_u / ϕP_n controls

Tension Checks

Leg Design Data (Tension)

Section No.	Elevation ft	Size	L ft	L_u ft	Kl/r	A in^2	P_u K	ϕP_n K	Ratio $\frac{P_u}{\phi P_n}$
T1	170 - 160	Sabre 3.5" x 0.216"	10'7/32"	5'3/32"	51.7	2.228	4.300	100.281	0.043 [1] ✔
T2	160 - 140	Sabre 4.5" x 0.438"	20'13/32"	6'8-1/8"	55.5	5.589	31.017	251.522	0.123 [1] ✔
T3	140 - 120	Sabre 6.625" x 0.432"	20'13/32"	6'8-1/8"	36.5	8.405	75.895	378.222	0.201 [1] ✔
T4	120 - 100	Sabre 8.625" x 0.5"	20'13/32"	6'8-1/8"	27.8	12.763	130.846	574.322	0.228 [1] ✔
T5	100 - 80	Sabre 10.750" x 0.500"	20'13/32"	10'7/32"	33.1	16.101	192.757	724.530	0.266 [1] ✔
T6	80 - 60	Sabre 12.75" x 0.5"	20'13/32"	10'7/32"	27.7	19.242	261.343	865.902	0.302 [1] ✔
T7	60 - 40	Sabre 16" x 0.5"	20'13/32"	10'7/32"	21.9	24.347	328.352	1095.630	0.300 [1] ✔
T8	40 - 20	Sabre 18" x 0.5"	20'13/32"	10'7/32"	19.4	27.489	393.616	1237.000	0.318 [1] ✔
T9	20 - 0	Sabre 18" x 0.5"	20'13/32"	5'3/32"	9.7	27.489	438.312	1237.000	0.354 [1] ✔

[1] P_u / ϕP_n controls

Diagonal Design Data (Tension)

Section No.	Elevation ft	Size	L ft	L_u ft	Kl/r	A in^2	P_u K	ϕP_n K	Ratio $\frac{P_u}{\phi P_n}$
T1	170 - 160	L2x2x3/8	10'15/16"	4'10-7/16"	101.3	0.809	3.333	35.194	0.095 [1] ✔
T2	160 - 140	L3x3x3/8	12'6-31/32"	6'1-7/16''	82.4	1.336	8.793	58.134	0.151 [1] ✔
T3	140 - 120	L3 1/2x3 1/2x3/8	14'3-25/32"	6'10-13/32"	78.9	1.544	12.756	67.146	0.190 [1] ✔
T4	120 - 100	L3 1/2x3 1/2x1/2	16'1-11/	7'8-1/8"	88.8	2.016	15.516	87.680	0.177 [1]

Section No.	Elevation ft	Size	L ft	L_u ft	Kl/r	A in^2	P_u K	ϕP_n K	Ratio $\frac{P_u}{\phi P_n}$
			32"						✔
T5	100 - 80	L5x5x1/2	19'3-9/16"	9'2-13/16"	73.4	3.094	20.943	134.578	0.156 [1] ✔
T6	80 - 60	L5x5x5/8	21'3/8"	10'5/32"	80.5	3.809	22.278	165.694	0.134 [1] ✔
T7	60 - 40	L5x5x5/8	22'9-23/32"	10'8-15/16"	86.4	3.750	23.547	163.145	0.144 [1] ✔
T8	40 - 20	L5x5x5/8	24'7-1/2"	11'6-13/16"	92.9	3.750	25.317	163.145	0.155 [1] ✔
T9	20 - 0	L5x5x5/8	16'1/8"	15'19/32"	118.8	3.868	31.906	168.243	0.190 [1] ✔

[1] P_u / ϕP_n controls

Horizontal Design Data (Tension)

Section No.	Elevation ft	Size	L ft	L_u ft	Kl/r	A in^2	P_u K	ϕP_n K	Ratio $\frac{P_u}{\phi P_n}$
T9	20 - 0	2L3 1/2x3 1/2x1/4x3/8 2L 'a' > 61.600 in - 183	23'	10'9"	118.3	2.113	24.002	91.921	0.261 [1] ✔

[1] P_u / ϕP_n controls

Top Girt Design Data (Tension)

Section No.	Elevation ft	Size	L ft	L_u ft	Kl/r	A in^2	P_u K	ϕP_n K	Ratio $\frac{P_u}{\phi P_n}$
T1	170 - 160	L2 1/2x2 1/2x3/16	8'	7'5"	118.9	0.571	0.248	24.840	0.010 [1] ✔

[1] P_u / ϕP_n controls

Redundant Horizontal (1) Design Data (Tension)

Section No.	Elevation ft	Size	L ft	L_u ft	Kl/r	A in^2	P_u K	ϕP_n K	Ratio $\frac{P_u}{\phi P_n}$
T9	20 - 0	L3x3x5/16	6'	5'3"	68.3	1.071	9.076	46.603	0.195 [1] ✔

[1] P_u / ϕP_n controls

Redundant Diagonal (1) Design Data (Tension)

Section No.	Elevation ft	Size	L ft	L_u ft	Kl/r	A in^2	P_u K	ϕP_n K	Ratio $\frac{P_u}{\phi P_n}$
T9	20 - 0	L3x3x1/4	7'5-7/32' '	6'5-9/32' '	83.1	0.869	5.867	37.804	0.155 [1] ✔

[1] P_u / ϕP_n controls

Inner Bracing Design Data (Tension)

Section No.	Elevation ft	Size	L ft	L_u ft	Kl/r	A in^2	P_u K	ϕP_n K	Ratio $\frac{P_u}{\phi P_n}$
T9	20 - 0	L3x3x3/16	12'	12'	153.4	1.090	0.014	35.316	0.000 [1] ✔

[1] P_u / ϕP_n controls

Section Capacity Table

Section No.	Elevation ft	Component Type	Size	Critical Element	P K	ϕP_{allow} K	% Capacity	Pass Fail
T1	170 - 160	Leg	Sabre 3.5" x 0.216"	1	-7.736	86.635	8.9	Pass
T2	160 - 140	Leg	Sabre 4.5" x 0.438"	19	-40.935	210.881	19.4	Pass
T3	140 - 120	Leg	Sabre 6.625" x 0.432"	40	-95.003	360.255	26.4	Pass
T4	120 - 100	Leg	Sabre 8.625" x 0.5"	62	-160.765	569.808	28.2	Pass
T5	100 - 80	Leg	Sabre 10.750" x 0.500"	83	-231.538	702.092	33.0	Pass
T6	80 - 60	Leg	Sabre 12.75" x 0.5"	99	-310.146	859.488	36.1	Pass
T7	60 - 40	Leg	Sabre 16" x 0.5"	114	-389.310	1110.690	35.1	Pass
T8	40 - 20	Leg	Sabre 18" x 0.5"	129	-467.770	1263.528	37.0	Pass
T9	20 - 0	Leg	Sabre 18" x 0.5"	144	-523.334	1289.925	40.6	Pass
T1	170 - 160	Diagonal	L2x2x3/8	12	-3.354	18.112	18.5	Pass
T2	160 - 140	Diagonal	L3x3x3/8	22	-8.889	40.506	21.9	Pass
T3	140 - 120	Diagonal	L3 1/2x3 1/2x3/8	44	-12.897	51.321	25.1	Pass
T4	120 - 100	Diagonal	L3 1/2x3 1/2x1/2	68	-15.693	53.678	29.2	Pass
T5	100 - 80	Diagonal	L5x5x1/2	89	-21.079	105.471	20.0	Pass
T6	80 - 60	Diagonal	L5x5x5/8	104	-22.481	116.354	19.3	Pass
T7	60 - 40	Diagonal	L5x5x5/8	119	-24.079	101.338	23.8	Pass
T8	40 - 20	Diagonal	L5x5x5/8	134	-26.567	87.432	30.4	Pass
T9	20 - 0	Diagonal	L5x5x5/8	160	-34.851	123.179	28.3	Pass
T9	20 - 0	Horizontal	2L3 1/2x3 1/2x1/4x3/8	159	-25.174	40.214	62.6	Pass
T1	170 - 160	Top Girt	L2 1/2x2 1/2x3/16	4	-0.291	8.385	3.5	Pass
T9	20 - 0	Redund Horz 1 Bracing	L3x3x5/16	157	-9.076	43.079	21.1	Pass
T9	20 - 0	Redund Diag 1 Bracing	L3x3x1/4	158	-5.764	23.979	24.0	Pass

Section No.	Elevation ft	Component Type	Size	Critical Element	P K	$øP_{allow}$ K	% Capacity	Pass Fail
T9	20 - 0	Inner Bracing	L3x3x3/16	166	-0.033	5.612	0.8	Pass
							Summary	
						Leg (T9)	40.6	Pass
						Diagonal (T8)	30.4	Pass
						Horizontal (T9)	62.6	Pass
						Top Girt (T1)	3.5	Pass
						Redund Horz 1 Bracing (T9)	21.1	Pass
						Redund Diag 1 Bracing (T9)	24.0	Pass
						Inner Bracing (T9)	0.8	Pass
						Bolt Checks	76.5	Pass
						RATING =	**76.5**	**Pass**

Program Version 8.1.1.0

APPENDIX B

BASE LEVEL DRAWING

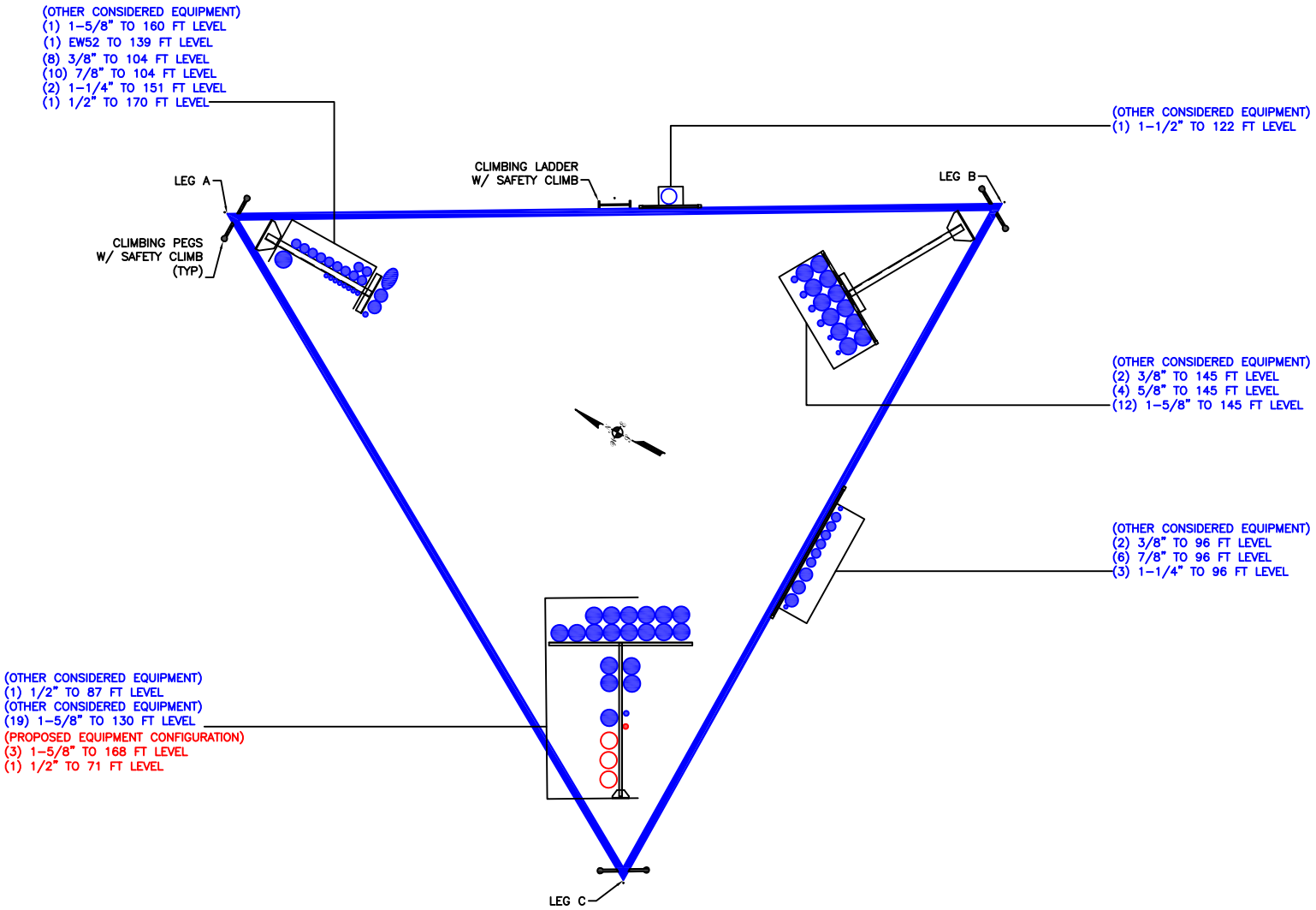

BUSINESS UNIT: 841273

APPENDIX C

ADDITIONAL CALCULATIONS

Self Support Anchor Rod Capacity

Site Info	
BU #	841273
Site Name	TRURO, MA
Order #	623577, Rev. 1

Analysis Considerations	
TIA-222 Revision	H
Grout Considered:	Yes
l_{ar} (in)	0

Applied Loads		
	Comp.	Uplift
Axial Force (kips)	564.24	472.60
Shear Force (kips)	72.30	63.05

**TIA-222-H Section 15.5 Applied*

Considered Eccentricity	
Leg Mod Eccentricity (in)	0.000
Anchor Rod N.A Shift (in)	0.000
Total Eccentricity (in)	0.000

**Anchor Rod Eccentricity Applied*

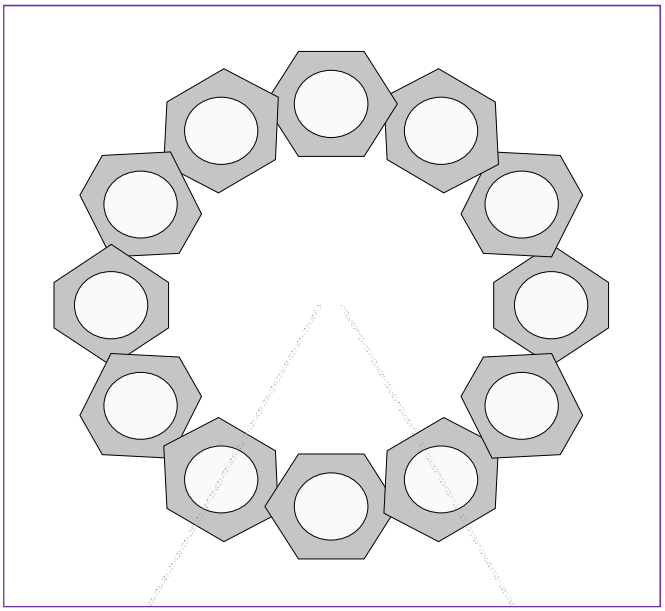

Connection Properties

Anchor Rod Data

(12) 2" ø bolts (A572-50 N; Fy=50 ksi, Fu=65 ksi)

l_{ar} (in): 0

Analysis Results

Anchor Rod Summary *(units of kips, kip-in)*

Pu_t = 39.38	ϕPn_t = 121.88	**Stress Rating**
Vu = 5.25	ϕVn = 76.58	**30.8%**
Mu = n/a	ϕMn = n/a	**Pass**

Drilled Pier Foundation

BU # :	841273
Site Name:	TRURO, MA
Order Number:	623577, Rev. 1
TIA-222 Revison:	H
Tower Type:	Self Support

Check Limitation	
Apply TIA-222-H Section 15.5:	☑
N/A	☐
Additional Longitudinal Rebar	
Input Effective Depths (else Actual):	☐
Shear Design Options	
Check Shear along Depth of Pier:	☑
Utilize Shear-Friction Methodology:	☐
Override Critical Depth:	☐

Go to Soil Calculations

Applied Loads	Comp.	Uplift
Moment (kip-ft)	0	0
Axial Force (kips)	564.24	472.6
Shear Force (kips)	72.3	63.05

Material Properties		
Concrete Strength, f'c:	3	ksi
Rebar Strength, Fy:	60	ksi
Tie Yield Strength, Fyt:	60	ksi

Pier Design Data		
Depth	41.5	ft
Ext. Above Grade	0.5	ft
Pier Section 1		
From 0.5' above grade to 41.5' below grade		
Pier Diameter	10	ft
Rebar Quantity	46	
Rebar Size	10	
Clear Cover to Ties	3	in
Tie Size	4	
Tie Spacing	12	in

Rebar & Pier Options

Embedded Pole Inputs

Belled Pier Inputs

Analysis Results		
Soil Lateral Check	*Compression*	*Uplift*
$D_{v=0}$ (ft from TOC)	23.12	23.12
Soil Safety Factor	39.21	44.96
Max Moment (kip-ft)	1152.22	1004.80
Rating*	*3.2%*	*2.8%*
Soil Vertical Check	*Compression*	*Uplift*
Skin Friction (kips)	1274.19	1274.19
End Bearing (kips)	294.52	-
Weight of Concrete (kips)	467.29	350.47
Total Capacity (kips)	1568.72	1624.66
Axial (kips)	1031.53	472.60
Rating*	*62.6%*	*27.7%*
Reinforced Concrete Flexure	*Compression*	*Uplift*
Critical Depth (ft from TOC)	24.05	22.18
Critical Moment (kip-ft)	1149.45	1002.32
Critical Moment Capacity	13994.23	13400.04
Rating*	*7.8%*	*7.1%*
Reinforced Concrete Shear	*Compression*	*Uplift*
Critical Depth (ft from TOC)	27.95	27.95
Critical Shear (kip)	138.84	121.07
Critical Shear Capacity	1107.51	1554.07
Rating*	*11.9%*	*7.4%*

Structural Foundation Rating*	**11.9%**
Soil Interaction Rating*	**62.6%**

*Rating per TIA-222-H Section 15.5

Soil Profile

Groundwater Depth	20	# of Layers	6

Layer	Top (ft)	Bottom (ft)	Thickness (ft)	γ_{soil} (pcf)	$\gamma_{concrete}$ (pcf)	Cohesion (ksf)	Angle of Friction (degrees)	Calculated Ultimate Skin Friction Comp (ksf)	Calculated Ultimate Skin Friction Uplift (ksf)	Ultimate Skin Friction Comp Override (ksf)	Ultimate Skin Friction Uplift Override (ksf)	Ult. Gross Bearing Capacity (ksf)	SPT Blow Count	Soil Type
1	0	5	5	120	150	0	0	0.000	0.000	0.00	0.00			Cohesionless
2	5	20	15	120	150	0	32	0.000	0.000	2.15	2.15			Cohesionless
3	20	23.5	3.5	60	87.6	0	32	0.000	0.000	2.21	2.21			Cohesionless
4	23.5	28.5	5	60	87.6	0	62	0.000	0.000	2.27	2.27			Cohesionless
5	28.5	31	2.5	60	87.6	2	0	1.100	1.100	1.10	1.10			Cohesive
6	31	41.5	10.5	60	87.6	0	33	0.000	0.000	0.00	0.00	5		Cohesionless

ASCE 7 Hazards Report

Address:
No Address at This Location

Standard: ASCE/SEI 7-10
Risk Category: III
Soil Class: D - Stiff Soil

Elevation: 0 ft (NAVD 88)
Latitude: 42.021667
Longitude: -70.075

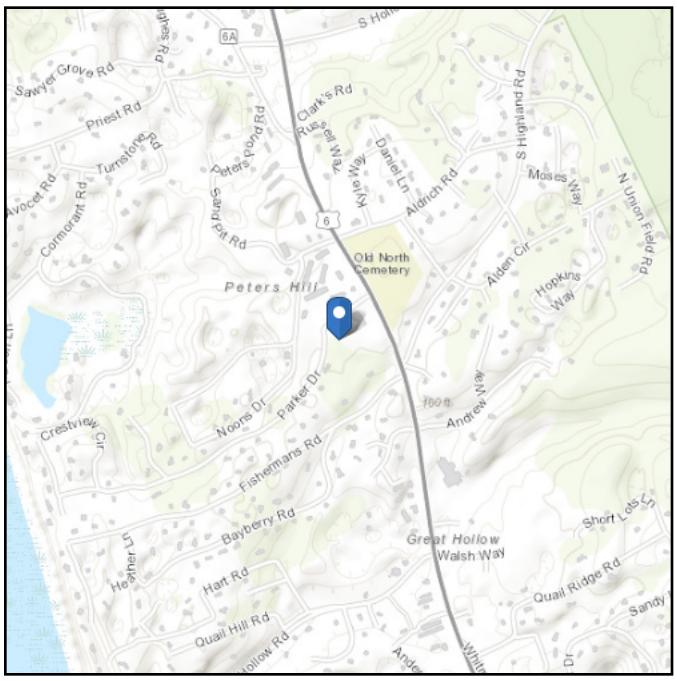

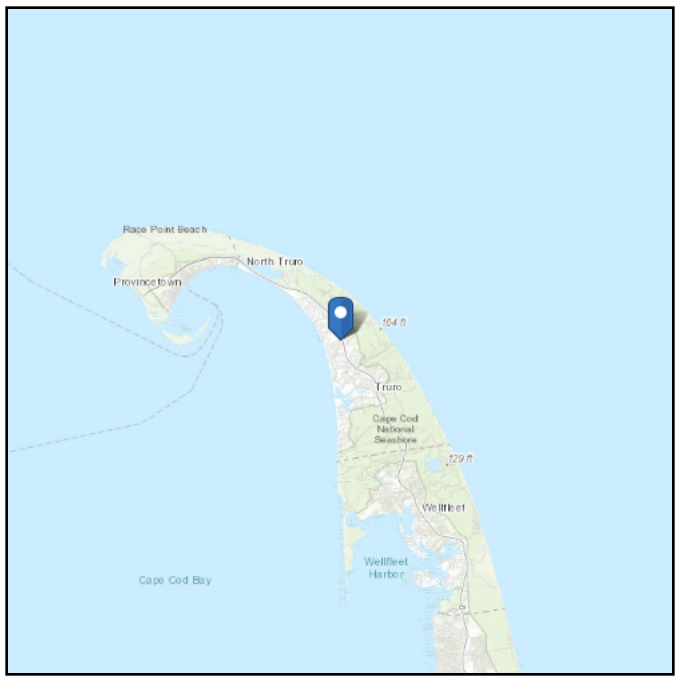

Seismic

Site Soil Class: D - Stiff Soil

Results:

S_S :	0.168	S_{DS} :	0.179
S_1 :	0.058	S_{D1} :	0.093
F_a :	1.6	T_L :	6
F_v :	2.4	PGA :	0.087
S_{MS} :	0.268	PGA_M :	0.14
S_{M1} :	0.139	F_{PGA} :	1.6
		I_e :	1.25

Seismic Design Category B

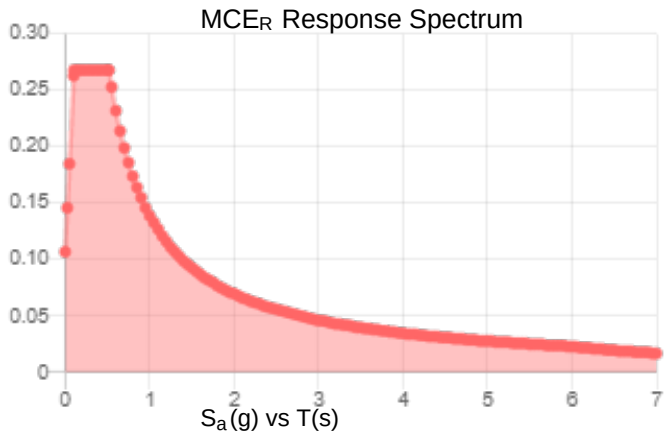

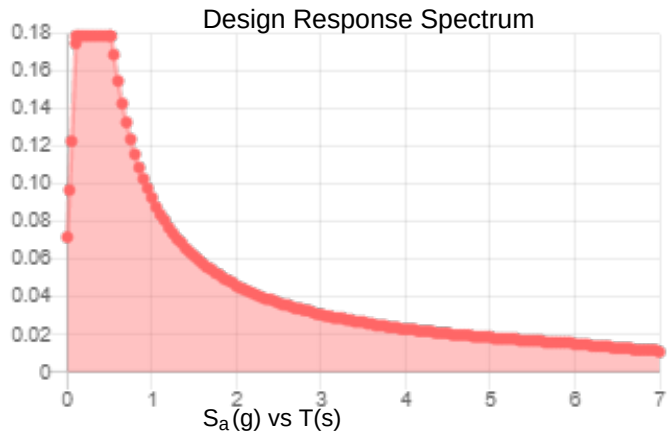

Data Accessed: **Tue Sep 20 2022**

Date Source:

USGS Seismic Design Maps based on ASCE/SEI 7-10, incorporating Supplement 1 and errata of March 31, 2013, and ASCE/SEI 7-10 Table 1.5-2. Additional data for site-specific ground motion procedures in accordance with ASCE/SEI 7-10 Ch. 21 are available from USGS.

Ice

Results:

Ice Thickness:	0.75 in.
Concurrent Temperature:	15 F
Gust Speed	50 mph
Data Source:	Standard ASCE/SEI 7-10, Figs. 10-2 through 10-8
Date Accessed:	Tue Sep 20 2022

Ice thicknesses on structures in exposed locations at elevations higher than the surrounding terrain and in valleys and gorges may exceed the mapped values.

Values provided are equivalent radial ice thicknesses due to freezing rain with concurrent 3-second gust speeds, for a 50-year mean recurrence interval, and temperatures concurrent with ice thicknesses due to freezing rain. Thicknesses for ice accretions caused by other sources shall be obtained from local meteorological studies. Ice thicknesses in exposed locations at elevations higher than the surrounding terrain and in valleys and gorges may exceed the mapped values.

The ASCE 7 Hazard Tool is provided for your convenience, for informational purposes only, and is provided “as is” and without warranties of any kind. The location data included herein has been obtained from information developed, produced, and maintained by third party providers; or has been extrapolated from maps incorporated in the ASCE 7 standard. While ASCE has made every effort to use data obtained from reliable sources or methodologies, ASCE does not make any representations or warranties as to the accuracy, completeness, reliability, currency, or quality of any data provided herein. Any third-party links provided by this Tool should not be construed as an endorsement, affiliation, relationship, or sponsorship of such third-party content by or from ASCE.

ASCE does not intend, nor should anyone interpret, the results provided by this Tool to replace the sound judgment of a competent professional, having knowledge and experience in the appropriate field(s) of practice, nor to substitute for the standard of care required of such professionals in interpreting and applying the contents of this Tool or the ASCE 7 standard.

In using this Tool, you expressly assume all risks associated with your use. Under no circumstances shall ASCE or its officers, directors, employees, members, affiliates, or agents be liable to you or any other person for any direct, indirect, special, incidental, or consequential damages arising from or related to your use of, or reliance on, the Tool or any information obtained therein. To the fullest extent permitted by law, you agree to release and hold harmless ASCE from any and all liability of any nature arising out of or resulting from any use of data provided by the ASCE 7 Hazard Tool.

FROM SELECT BOARD POLICY 13 – APPOINTMENT POLICY

The same questions, listed below, will be asked of all applicants, though Select Board members may have follow-up questions of some applicants, based upon responses in their written applications or their interviews. Applicants will receive the questions in advance of being interviewed.

QUESTIONS: For all applicants:

1. Please tell us about yourself and why you are interested in joining the ____ board, committee, commission.

2. Are there any specific skills that you would bring to the workings of this group?

3. Tell us about any experience you have had working in a group setting.

4. Do you have a sense of the time required to serve and are you able to make that commitment?

For regulatory and adjudicatory boards, committees, commissions:

1. Have you reviewed the relevant local/state laws and regulations that govern this board, committee, commission?

2. Are you able to make decisions based on the information presented in a case and applicable laws/regulations, regardless of personal opinion?

TOWN OF TRURO

P.O. Box 2030, Truro MA 02666

Tel: (508) 349-7004 Fax: (508) 349-5505

POLICY MEMORANDUM #13

Date: Adopted March 3, 2004; Revised December 5, 2017, revised September 13, 2022; rev September 27, 2022

*This policy was revised at the September 13, 2022 Select Board meeting solely to reflect the titles used in the Town Charter for the Town Manager and Select Board and to modify language to be gender neutral. No changes were made to the content of the Policy at that meeting.

PURPOSE: The Select Board welcomes a diversity of membership on all of its appointed multi-member boards, committees and commissions. This policy provides general information about serving on a town body and aims to ensure consistency and fairness in the Select Board's appointments.

There are four types of boards to which the Select Board makes appointments:

- **Advisory,** which are given a charge by the Select Board and make recommendations.
- **Ad hoc,** which are appointed for a specific purpose for a specific period of time to complete a task.
- **Regulatory,** which are governed by both Massachusetts General Law and local regulations.
- **Adjudicatory,** which are governed by both Massachusetts General Law and local regulations, and consider individual cases brought before it.

At times, the Select Board will make appointments to fill a vacancy on an elected board. The interviews and appointments are made jointly with the members of the board on which the vacancy occurs.

Only full-time Truro residents/voters may be considered for appointment to regulatory boards. The Select Board may consider non-resident taxpayers for appointments to non-regulatory boards. The Select Board has sole discretion to make appointments as it considers to be in the best interests of the town.

PROCEDURES: When a vacancy occurs on an appointed board, committee or commission – due to resignation or expiration of a member's term – the Select Board shall advertise the position(s), including these details:

- The name of the board, committee, commission and name of its current chair
- The term(s) of the vacancy/vacancies
- The typical meeting schedule
- How to obtain an application form
- When online/written applications are due

All applicants for boards, committees and commissions shall fill out a written application to serve, either online or on paper. Board, committee and commission members who are seeking reappointment must also reapply, answering the relevant questions based upon their service. New applicants seeking to serve will be given the same consideration as members seeking reappointment. Applicants for vacancies will be interviewed as soon as they can be accommodated on the Select Board's agenda. If there are multiple candidates for a position (or positions), all applicants will be interviewed at the same meeting. If that is not possible, the Select Board will wait until all applicants have been interviewed before making the appointment(s).

The same questions, listed below, will be asked of all applicants, though Select Board members may have follow-up questions of some applicants, based upon responses in their written applications or their interviews. Applicants will receive the questions in advance of being interviewed.

As part of the application process, board, committee, commission chairs will be asked to comment on each applicant, whether a new candidate or a member seeking reappointment.

The Select Board will use the following protocols in interviewing applicants:

- Questions will be related to the board, committee or commission on which the applicant wants to serve.
- Questions asked of applicants for regulatory and adjudicatory bodies will avoid seeking opinions on matters that are governed by local or state regulations or opinions on matters that are likely to come before the board.
- Comments from the board, committee or commission chair will be considered – either submitted in writing with the application or live during the interview process.

After all applicants have been interviewed, prior to any nominations, all members of the Select Board will have the opportunity to express their preferences for filling the position(s). Nominations for the position(s) will be taken and voted upon after all Select Board discussion.

If the Select Board chooses to leave a position vacant, the applicant(s) will be given an explanation. The Select Board will write letters of thanks to all members of boards, committees and commissions who finish their service, either through resignation or at the end of their terms.

QUESTIONS:

For all applicants:

1. Please tell us about yourself and why you are interested in joining the ____ board, committee, commission.
2. Are there any specific skills that you would bring to the workings of this group?
3. Tell us about any experience you have had working in a group setting.
4. Do you have a sense of the time required to serve and are you able to make that commitment?

For regulatory and adjudicatory boards, committees, commissions:

1. Have you reviewed the relevant local/state laws and regulations that govern this board, committee, commission?
2. Are you able to make decisions based on the information presented in a case and applicable laws/regulations, regardless of personal opinion?

For advisory boards, committees, commissions:

1. Have you followed the work of this group?

2. Are there any ideas or projects you would suggest or pursue as a new member?

OATH OF OFFICE: Written notification of appointment is issued to newly appointed board members, who must report to the Town Clerk's office to be sworn in. Elected and appointed officials must sign an acknowledgement of receipt of information on the state's Open Meeting Law. They also must complete state-mandated online ethics/conflict-of-interest training, required every two years. Members of all boards will be given the Truro Boards, Committees and Commissions Handbook. Newly appointed members are expected to familiarize themselves with the charge and the workings of the board to which they are appointed. They must also adhere to protocols in seeking any assistance from town staff.

TERM OF OFFICE: The full term of office for most positions on appointed boards, committees and commissions is three years, ending on June 30 of the third year. Terms are staggered to assure continuity as new members are elected or appointed.

RESIGNATION: If a board member can no longer fulfill the duties of office, the member must submit a written resignation, including the effective date, to the appointing authority, with a copy to the board chairperson and the Town Clerk. The Select Board encourages board members who resign to specify their reasons, if other than personal. This may be done through an exit interview with the board chair or the Select Board liaison

ATTENDANCE: If a member or alternate member of an appointed board is absent for four consecutive meetings without approval by the rest of the board, the chair will alert the appointing authority and that member will be replaced.

RECALL / REMOVAL: Members of appointed boards may be removed by the appointing authority if they are found to violate professional codes of conduct. The town charter provides that any appointed board member may be suspended or removed from office for good cause. These include: incapacity other than temporary illness; inefficiency and/or inability to perform assigned tasks; insubordination and/or refusal to carry out lawful instructions; or conduct unbecoming to the office and/or which reflects adversely upon the town.

Kristen Reed, Chair

Robert Weinstein, Chair

John Dundas, Clerk

Susan Areson

Stephanie Rein
Truro Select Board

TOWN OF TRURO

PLANNING BOARD
Meeting Minutes
September 7, 2022 – 5:00 pm
REMOTE PLANNING BOARD MEETING

Members Present (Quorum): Rich Roberts (Vice Chair); Jack Riemer (Clerk); Paul Kiernan; Ellery Althaus

Members Absent: Anne Greenbaum (Chair); R. Bruce Boleyn; Caitlin Townsend

Other Participants: Town Planner/Land Use Counsel Barbara Carboni; Select Board Liaison John Dundas; Timothy Greene of TerraSearch, LLC and representative for Crown Castle (Applicant)

Remote meeting convened at 5:03 pm, Wednesday, September 7, 2022, by Vice Chair Roberts who announced that this was a remote public meeting aired live on Truro TV Channel 18 and was being recorded. Town Planner/Land Use Counsel Carboni also provided information as to how the public may call into the meeting or provide written comment. Members introduced themselves to the public.

Public Comment Period

Public comment, for items not on the agenda, was opened by Vice Chair Roberts and there were none.

Planner Report

Town Planner/Land Use Counsel Carboni reported that there will be a Local Comprehensive Planning Committee (LCPC) live event held on October 15th at the Community Center from 10am-1pm. The Open Space Committee will have its first meeting with consultant Jeff Thibodeau tomorrow morning.

Chair Report

Vice Chair Roberts announced that there would be no Chair Report this evening.

Board Action/Review

2022-005/PB - Regan McCarthy seeks approval of Form A- Application for Determination that Plan Does Not Require Approval (ANR) pursuant to Section 2.2 of the Town of Truro Rules and Regulations Governing the Subdivision of Land with respect to property at 35A Higgins Hollow Road, Truro MA, Atlas Map 47, Parcel 2, Registry of Deeds title reference: Book 20807, Page 42.

Vice Chair Roberts announced that the Applicant requested a continuance until the Planning Board meeting on September 21, 2022. Town Planner/Land Use Counsel Carboni confirmed the request and stated that no vote was necessary to grant the continuance.

2022-009/SPR - Crown Castle, on property located at 344 Route 6 (Atlas Map 39, Parcel 172). Applicant seeks a Special Permit under Section 40.5 of the Truro Zoning Bylaw, and as an Eligible Facilities Request

for a minor modification under Section 64091 and the rules of the Federal Communications Commission ("FCC"), to modify an existing tower: remove or replace antennas, ancillary equipment, and ground equipment as per plans for an existing carrier on an existing wireless communication facility; and replace equipment on existing concrete pad. Such modification will not substantially change the physical dimensions of such tower or base station. The modification does not constitute a substantial change to the existing tower under 47 C.F.R. §1.6100.

Vice Chair Roberts recognized Mr. Greene who provided a summary to the changes which were proposed. Due to the merger between T-Mobile and Sprint, there will be a consolidation of equipment that will result in less equipment on the site. Vice Chair Roberts and Members discussed the following questions and concerns with Mr. Greene:

There is an issue of sparce cellular coverage for emergency service calls in Truro, particularly from the beaches, so are the services provided by the tower redundant? Mr. Greene responded that it is not redundant.

Does the tower have any antennas for emergency services? Mr. Greene was unsure if any antenna was specifically designated for public safety, but he said that it could be added.

What is the fall zone for this tower as it is adjacent to the Public Safety Facility? Mr. Greene responded that the tower is rated for a wind speed up to 139 miles per hour and has been on location for nearly twenty years without issue. Mr. Greene didn't identify a specific fall radius but emphasized that the wind speed ratings for the tower have been significantly increased over the last twenty years and the tower is compliant with today's standards. The risk factor category for the tower is 2.

Vice Chair Roberts noted that the risk factor category for the tower is 2 but expressed concern that the Applicant's engineer, located in Oklahoma, who performed the study may not know that the tower is in such proximity to the Public Safety Facility as it is not indicated on the Site Plan.

Is it possible to install repeaters to ensure better coverage in emergency situations? Mr. Greene replied that he does not represent the carrier but Crown Castle.

Vice Chair Roberts asked Mr. Greene to resubmit an analysis addressing those antennas at 122' can be removed unless they are placeholders to be used in the future and increase the risk factor category to 3. Mr. Greene agreed to provide this information by the next meeting on September 21st.

Development of Warrant Articles

Vice Chair Roberts recognized Member Kiernan who said that he is compiling an email list to use for outreach as there are 150 different people who sit on various boards/committees/commissions in Truro. A challenge has been that individuals who serve on regulatory boards have Town email addresses and others use either business or personal email addresses. Once the list is compiled, with assistance from Town Hall staff, Member Kiernan will contact those individuals for input on changes for Warrant Articles.

Minutes

Vice Chair Roberts, after consulting with Town Planner/Land Use Counsel Carboni, deferred the approval of the Minutes on tonight's Agenda until the next Planning Board meeting as only two Members from those meetings were present tonight.

Vice Chair Roberts announced that the next Planning Board meeting will be on Wednesday, September 21, 2022, at 5pm.

Member Riemer made a motion to adjourn the meeting at 5:49 pm.
Member Kiernan seconded the motion.
So voted, 4-0, motion carries.

Respectfully submitted,

Alexander O. Powers
Board/Committee/Commission Support Staff

TRURO PLANNING BOARD
Work Session September 28, 2022

Minutes

Attending: Anne Greenbaum – Chair; Rich Roberts – Vice Chair; Jack Riemer – Clerk; Paul Kiernan, Ellery Althaus, Caitlin Townsend – Members; Barbara Carboni – Town Planner & Land Use Counsel

1) Discussion of Term Length for Charter Review Committee meeting November 17, 2022
   - Question – why is the term 5 years?
     - When Planning Board establish Select Board suggested 5 members for staggered 5-year terms
   - Comments
     - Sometimes institutional memory guides Boards, with 3-year terms can lose that
     - Member 1.9 years – originally the 5-year term was daunting, now doesn't seem that way, need the time, there is steep learning curve. 5 years, maybe 4
     - Member 1.5 years – learning & getting the hang of it. 3 feels short – 5, maybe 4
     - 10 year member – time goes by fast, never enough time to learn everything
       - Maybe add alternate members to try out planning board, start learning
   - State law – 5-9 members, elected or appointed

2) Review Draft 2023 Calendar
   - 1 change – change 1st September meeting from September 6 to September 13.

3) Interviews for open Planning Board position
   - All members available October 25, 2022
   - Question – will new Select Board appointment policy be in effect?
   - Chair to coordinate with Select Board chair concerning interview logistics/structure
   - Members to bring potential questions to next Select Board meeting

4) Date for Review of Housing Production Plan
   - Preference to not do as part of regular Planning Board meeting but to have separate meeting
   - Confirmed availability of all for Thursday December 8 4:15/4:30 pm

5) Potential Warrant Articles – Decisions on whether to continue and if so next steps
   - Driveway grades – Select Board passed new curb cut policy earlier this year that somewhat addresses this.
     i. Planning Board will not propose bylaw change

- Street Definition – Rich Robert has been researching this issue and has put together document with: past attempts, history, identified major issue, and examples from other Cape towns.
    i. Planning Board will continue to develop potential warrant article
    ii. Next steps –
        - Chair to talk with John Dundas, Select Board liaison about early Select Board input
        - Identified others to engage now
        - Report to all Board members
- Lot Coverage/Site Clearing – Paul Kiernan presented update, with information on other towns efforts.
    i. Planning Board will continue to develop potential warrant articles
    ii. Next steps
        - Chair and Member Kiernan to develop 1- or 2-page summary document to send to the following Boards to update them and ask for their input. (Board of Health, Climate Action Committee, Conservation Commission, Open Space Committee, Select Board, Walsh Property Community Planning Committee), Zoning Board of Appeals)
        - Also, will be sent to Emily Beebe – Health & Conservation Agent
- Housing – Board looking at number of potential zoning articles including
    i. Duplexes
    ii. Multifamily Structures
    iii. Mixed Used Structures
    iv. Overlay District(s)
    v. Allowing Affordable Housing on Undersize lots and lots that otherwise do not meeting Zoning bylaws (looking at recently passed article in Wellfleet)
    vi. Ad Hoc housing group informed of this list and discussing these and potential other possibilities.
- Discussion of when to hold community forums on

Next Planning Board Meeting – Wednesday October 12, 2022 at 5 pm

Next Work Session on Warrant Article – Wednesday October 26, 2022

Actions

- Agenda item – enforcing date(s) for supplemental material

Respectfully submitted,

Anne Greenbaum