© Copyright 2019 - Ramaker & Associates, Inc. - All Rights Reserved
DRAWN BY: BTL CHECKED BY: AJK

I:\45300\45315\CAD\45315_10014237_AE201_190916_MA1061_Rev0_3C-4C_Retrofit.dwg Printed by: amaurtua on Nov 13, 2019 - 12:26pm

PROJECT NOTES:

1. SITE INFORMATION OBTAINED FROM THE FOLLOWING:
   A. PLAN ENTITLED "SOUTH TRURO" PREPARED BY A SAXON DESIGN GROUP OF TOMS RIVER, NEW JERSEY LAST REVISED 04/28/2015.
   B. LIMITED FIELD OBSERVATION BY RAMAKER & ASSOCIATES ON 07/29/2019.
2. THE CONTRACTOR SHALL COMPLY WITH ALL APPLICABLE CODES, ORDINANCES, LAWS AND REGULATIONS OF ALL MUNICIPALITIES, UTILITY COMPANIES OR OTHER PUBLIC/GOVERNING AUTHORITIES.
3. THE CONTRACTOR SHALL BE RESPONSIBLE FOR OBTAINING ALL PERMITS AND INSPECTIONS THAT MAY BE REQUIRED BY ANY FEDERAL, STATE, COUNTY OR MUNICIPAL AUTHORITIES.
4. THE CONTRACTOR SHALL NOTIFY THE CONSTRUCTION MANAGER, IN WRITING, OF ANY CONFLICTS, ERRORS OR OMISSIONS PRIOR TO THE SUBMISSION OF BIDS OR PERFORMANCE OF WORK.
5. THE CONTRACTOR SHALL BE RESPONSIBLE FOR PROTECTING ALL EXISTING SITE IMPROVEMENTS PRIOR TO COMMENCING CONSTRUCTION. THE CONTRACTOR SHALL REPAIR ANY DAMAGE AS A RESULT OF CONSTRUCTION OF THIS FACILITY AT THE CONTRACTOR'S EXPENSE TO THE SATISFACTION OF THE OWNER.
6. THE SCOPE OF WORK FOR THIS PROJECT SHALL INCLUDE PROVIDING ALL MATERIALS, EQUIPMENT AND LABOR REQUIRED TO COMPLETE THIS PROJECT. ALL EQUIPMENT SHALL BE INSTALLED IN ACCORDANCE WITH MANUFACTURER'S RECOMMENDATIONS.
7. THE CONTRACTOR SHALL VISIT THE PROJECT SITE PRIOR TO SUBMITTING THE BID TO VERIFY THAT THE PROJECT CAN BE CONSTRUCTED IN ACCORDANCE WITH THE CONTRACT DOCUMENTS AND CONSTRUCTION DRAWINGS.
8. THE CONTRACTOR SHALL VERIFY ALL EXISTING DIMENSIONS AND CONDITIONS PRIOR TO COMMENCING ANY WORK. ALL DIMENSIONS OF EXISTING CONSTRUCTION SHOWN ON THESE DRAWINGS MUST BE VERIFIED. THE CONTRACTOR SHALL NOTIFY THE CONSTRUCTION MANAGER OF ANY DISCREPANCIES PRIOR TO ORDERING MATERIAL OR PROCEEDING WITH CONSTRUCTION.
9. SINCE THE CELL SITE MAY BE ACTIVE, ALL SAFETY PRECAUTIONS MUST BE TAKEN WHEN WORKING AROUND HIGH LEVELS OF ELECTROMAGNETIC RADIATION. EQUIPMENT SHOULD BE SHUTDOWN PRIOR TO PERFORMING ANY WORK THAT COULD EXPOSE THE WORKERS TO DANGER. PERSONAL RF EXPOSURE MONITORS ARE REQUIRED TO BE WORN TO ALERT OF ANY POTENTIALLY DANGEROUS EXPOSURE LEVELS.
10. THE PROPOSED FACILITY WILL CAUSE NO INCREASE IN STORM WATER RUNOFF, THEREFORE, NO DRAINAGE STRUCTURES ARE PROPOSED.
11. NO NOISE, SMOKE, DUST OR ODOR WILL RESULT FROM THIS FACILITY AS TO CAUSE A NUISANCE.
12. THE FACILITY IS UNMANNED AND NOT FOR HUMAN HABITATION (NO HANDICAP ACCESS IS REQUIRED).
13. THE FACILITY DOES NOT REQUIRE POTABLE WATER OR SANITARY SERVICE.
14. CONTRACTOR SHALL VERIFY ANTENNA ELEVATION AND AZIMUTHS WITH RF ENGINEERING PRIOR TO INSTALLATION.
15. THE TOWER, MOUNTS AND ANTENNAS SHALL BE DESIGNED TO MEET EIA/TIA-222-G AS PER IBC REQUIREMENTS.
16. ALL STRUCTURAL ELEMENTS SHALL BE HOT DIPPED GALVANIZED STEEL.
17. CONTRACTOR MUST FIELD LOCATE ALL EXISTING UNDERGROUND UTILITIES PRIOR TO ANY EXCAVATION.
18. CONSTRUCTION SHALL NOT COMMENCE UNTIL COMPLETION OF A PASSING STRUCTURAL ANALYSIS CERTIFIED BY A LICENSED PROFESSIONAL ENGINEER. THE STRUCTURAL ANALYSIS IS TO BE PERFORMED BY OTHERS.
19. CONTRACTOR SHALL CONTACT STATE SPECIFIC ONE CALL SYSTEM THREE WORKING DAYS PRIOR TO ANY EARTH MOVING ACTIVITIES.

at&t

SITE NAME: SOUTH TRURO
FA NUMBER: 10014237
SITE NUMBER: MAL01061
ADDRESS: 5 TOWN DUMP ROAD
TRURO, MA 02666
SCOPE: 3C - MRCTB040627 (2101A0PQWK),
4C - MRCTB040695 (2101A0PQG3),
4TX4RX SOFTWARE RETROFIT - MRCTB040751 (2101A0PQNJ)

AERIAL MAP:

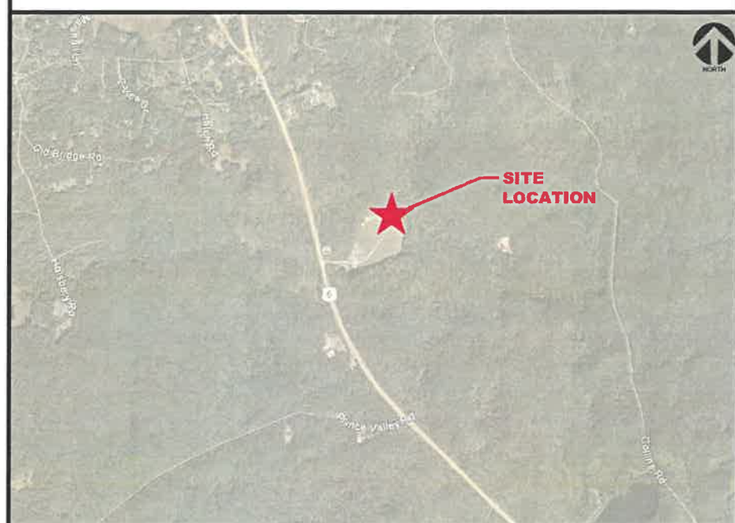

CODE COMPLIANCE:

ALL WORK SHALL BE PERFORMED AND MATERIALS INSTALLED IN ACCORDANCE WITH THE CURRENT EDITIONS OF THE FOLLOWING CODES AS ADOPTED BY THE LOCAL GOVERNING AUTHORITIES. NOTHING IN THESE PLANS IS TO BE CONSTRUED TO PERMIT WORK NOT CONFORMING TO THESE CODES.

1. 9TH EDITION OF THE MA STATE BUILDING CODE
2. 2015 INTERNATIONAL BUILDING CODE
3. 2015 INTERNATIONAL MECHANICAL CODE
4. ANSI/TIA-22-G STRUCTURAL STANDARD

811 Know what's below. Call before you dig. www.call811.com

PROJECT INFORMATION:

SITE INFORMATION:

LATITUDE: 41.985769° N
LONGITUDE: -70.04134° W
JURISDICTION: BARNSTABLE COUNTY

APPLICANT/LESSEE:

COMPANY: AT&T
ADDRESS: NEW ENGLAND MARKET

PROPERTY OWNER:

PROPERTY OWNER: SBA TOWERS II, LLC
5900 BROKEN SOUND PARKWAY NW
BOCA RATON, FL 33487

REAL ESTATE:

COMPANY: SMARTLINK, LLC
ADDRESS: 85 RANGEWAY ROAD
BUILDING 3, SUITE 102
CITY, STATE, ZIP: NORTH BILLERICA, MA 01862
CONTACT: KRISTINA COTTONE
E-MAIL: KRISTINA.COTTONE @SMARTLINKLLC.COM

CONSTRUCTION MANAGER:

COMPANY: SMARTLINK, LLC
ADDRESS: 85 RANGEWAY ROAD
BUILDING 3, SUITE 102
CITY, STATE, ZIP: NORTH BILLERICA, MA 01862
CONTACT: RYAN DONNELLY
E-MAIL: RYAN.DONNELLY@SMARTLINKLLC.COM

ENGINEER:

COMPANY: RAMAKER & ASSOCIATES, INC.
ADDRESS: 855 COMMUNITY DRIVE
CITY, STATE, ZIP: SAUK CITY, WI 53583
CONTACT: ANGELA KVALHEIM
E-MAIL: AKVALHEIM@RAMAKER.COM

PROJECT DESCRIPTION/ SCOPE OF WORK

- REMOVE (3) EXISTING RRUS-11 B12 RRUs, (1) PER SECTOR
- INSTALL (3) NEW 4478 B14 RRUs, (1) PER SECTOR
- INSTALL (3) NEW 4449 B5/B12 RRUS, (1) PER SECTOR
- REMOVE (6) EXISTING DIPLEXERS, (2) PER SECTOR
- RELOCATE (6) EXISTING LPG 17201 TMAS, (2) PER SECTOR
- REMOVE (3) EXISTING KATHREIN 800-10121 ANTENNAS, (1) PER SECTOR
- RELOCATE (3) EXISTING KMW AM-X-CD-16-00T-RET ANTENNAS, (1) PER SECTOR
- RELOCATE (2) EXISTING KATHREIN 800-10121 ANTENNAS, (1) EACH IN BETA & GAMMA SECTORS
- INSTALL (3) NEW CCI DMP65R-BU4DA ANTENNAS, (1) PER SECTOR
- INSTALL (1) NEW DC9 SQUID
- INSTALL (2) NEW DC POWER CABLES
- INSTALL (1) NEW FIBER TRUNK
- REPLACE BB WITH (2) 6630 & IDLe
- REPLACE (1) POWER PLANT WITH NETSURE 7100 WITH BATTERIES

PROPOSED PROJECT SCOPE BASED ON RFDS ID# 3097967, VERSION 4.0, LAST UPDATED 10/29/2019.
CONTRACTOR TO VERIFY IN FIELD.

SHEET INDEX

SHEET NUMBER	SHEET DESCRIPTION
T-1	TITLE SHEET
GN-1	GENERAL NOTES
C-1	COMPOUND PLAN
C-2	EQUIPMENT LAYOUT PLAN
C-3	ANTENNA LAYOUTS AND ANTENNA SCHEDULE
A-1	CONSTRUCTION DETAILS
A-2	CONSTRUCTION DETAILS
A-3	RF PLUMBING DIAGRAM
G-1	GROUNDING DETAILS
G-2	GROUNDING DETAILS

at&t

smartlink
85 RANGEWAY ROAD - BLDG 3, SUITE 102
NORTH BILLERICA, MA 01862
SMARTLINKLLC.COM

RAMAKER & ASSOCIATES, INC.
100% EMPLOYEE-OWNED
855 Community Dr, Sauk City, WI 53583
608-643-4100 www.Ramaker.com
Sauk City, WI • Willmar, MN
Woodcliff Lake, NJ • Bayamon, PR

Certification & Seal:
I hereby certify that this plan, specification, or report was prepared by me or under my direct supervision and that I am a duly Licensed Professional Engineer under the laws of the State of Massachusetts.

COMMONWEALTH OF MASSACHUSETTS
JAMES R. SKOWRONSKI
CIVIL
No. 47833
REGISTERED PROFESSIONAL ENGINEER

Registered Civil Engineer Signature: Date: 11/13/2019

MARK	DATE	DESCRIPTION
2	11/13/19	FINAL CDs REVISED PER COMMENTS
1	11/06/19	FINAL CDs ISSUED
0	09/26/19	CDs ISSUED FOR REVIEW

ISSUE PHASE: FINAL — DATE ISSUED: 11/13/2019

PROJECT TITLE:
SOUTH TRURO
FA# 10014237
SITE# MAL01061

PROJECT INFORMATION:
5 TOWN DUMP ROAD
TRURO, MA 02666
BARNSTABLE COUNTY

SHEET TITLE:
TITLE SHEET

SCALE: NONE

PROJECT NUMBER: 45315
SHEET NUMBER: T-1

This document contains confidential or proprietary information of Ramaker & Associates, Inc. Neither this document nor the information herein is to be reproduced, distributed, used or disclosed either in whole or in part except as authorized by Ramaker and Associates, Inc.

© Copyright 2019 - Ramaker & Associates, Inc. - All Rights Reserved
DRAWN BY: BTL CHECKED BY: AJK

I:\45300\45315\CAD\45315_10014237_AE201_190916_MA1061_Rev0_3C-4C_Retrofit.dwg Printed by: amaurtua on Nov 13, 2019 - 12:26pm

GENERAL NOTES:

1. THE SUBCONTRACTOR SHALL REVIEW AND INSPECT THE EXISTING FACILITY GROUNDING SYSTEM (AS DESIGNED AND INSTALLED) FOR STRICT COMPLIANCE WITH THE NEC (AS ADOPTED BY THE AHJ), THE SITE-SPECIFIC (UL, LPI, OR NFPA) LIGHTING PROTECTION CODE, AND GENERAL COMPLIANCE WITH TELCORDIA AND TIA GROUNDING STANDARDS. THE SUBCONTRACTOR SHALL REPORT ANY VIOLATIONS OR ADVERSE FINDINGS TO THE CONTRACTOR FOR RESOLUTION.
2. ALL GROUND ELECTRODE SYSTEMS (INCLUDING TELECOMMUNICATION, RADIO, LIGHTNING PROTECTION, AND AC POWER GES'S) SHALL BE BONDED TOGETHER, AT OR BELOW GRADE, BY TWO OR MORE COPPER BONDING CONDUCTORS IN ACCORDANCE WITH THE NEC.
3. THE SUBCONTRACTOR SHALL PERFORM IEEE FALL-OF-POTENTIAL RESISTANCE TO EARTH TESTING (PER IEEE 1100 AND FOR GROUND ELECTRODE SYSTEMS. THE SUBCONTRACTOR SHALL FURNISH AND INSTALL SUPPLEMENTAL GROUND ELECTRODES AS NEEDED TO ACHIEVE A TEST RESULT OF 5O HMS OR LESS.
4. THE SUBCONTRACTOR IS RESPONSIBLE FOR PROPERLY SEQUENCING GROUNDING AND UNDERGROUND CONDUIT INSTALLATION AS TO PREVENT ANY LOSS OF CONTINUITY IN THE GROUNDING SYSTEM OR DAMAGE TO THE CONDUIT.
5. METAL CONDUIT AND TRAY SHALL BE GROUNDED AND MADE ELECTRICALLY CONTINUOUS WITH LISTED BONDING FITTINGS OR BY BONDING ACROSS THE DISCONTINUITY WITH #6 AWG COPPER WIRE UL APPROVED GROUNDING TYPE CONDUIT CLAMPS.
6. METAL RACEWAY SHALL NOT BE USED AS THE NEC REQUIRED EQUIPMENT GROUND CONDUCTOR. STRANDED COPPER CONDUCTORS WITH GREEN INSULATION, SIZED IN ACCORDANCE WITH THE NEC, SHALL BE FURNISHED AND INSTALLED WITH THE POWER CIRCUITS TO BTS EQUIPMENT.
7. EACH BTS CABINET FRAME SHALL BE DIRECTLY CONNECTED TO THE EQUIPMENT GROUND RING WITH GREEN INSULATED SUPPLEMENTAL EQUIPMENT GROUND WIRES, 6 AWG STRANDED COPPER OR LARGER FOR INDOOR BTS; 2 AWG STRANDED COPPER FOR OUTDOOR BTS.
8. CONNECTIONS TO THE GROUND BUS SHALL NOT BE DOUBLED UP OR STACKED. BACK TO BACK CONNECTIONS ON OPPOSITE SIDES OF THE GROUND BUS ARE PERMITTED.
9. ALL EXTERIOR GROUND CONDUCTORS BETWEEN EQUIPMENT/GROUND BARS AND THE GROUND RING, SHALL BE #2 AWG SOLID TINNED COPPER UNLESS OTHERWISE INDICATED.
10. ALUMINUM CONDUCTOR OR COPPER CLAD STEEL CONDUCTOR SHALL NOT BE USED FOR GROUNDING CONNECTIONS.
11. USE OF 90° BENDS IN THE PROTECTION GROUNDING CONDUCTORS SHALL BE AVOIDED WHEN 45° BENDS CAN BE ADEQUATELY SUPPORTED. ALL BENDS SHALL BE MADE WITH 12" RADIUS OR LARGER.
12. EXOTHERMIC WELDS SHALL BE USED FOR ALL GROUNDING CONNECTIONS BELOW GRADE.
13. ALL GROUND CONNECTIONS ABOVE GRADE (INTERIOR) SHALL BE FORMED USING HIGH PRESS CRIMPS EXCEPT FOR GROUND BAR CONNECTION FROM MGB TO OUTSIDE EXTERIOR GROUND SHALL ALL BE CADWELD CONNECTIONS.
14. COMPRESSION GROUND CONNECTIONS MAY BE REPLACED BY EXOTHERMIC WELD CONNECTIONS.
15. ICE BRIDGE BONDING CONDUCTORS SHALL BE EXOTHERMICALLY BONDED TO THE TOWER GROUND BAR.
16. APPROVED ANTIOXIDANT COATINGS (I.E. CONDUCTIVE GEL OR PASTE) SHALL BE USED ON ALL COMPRESSION AND BOLTED GROUND CONNECTIONS.
17. ALL EXTERIOR AND INTERIOR GROUND CONNECTIONS SHALL BE COATED WITH A CORROSION RESISTANT MATERIAL.
18. MISCELLANEOUS ELECTRICAL AND NON-ELECTRICAL METAL BOXES, FRAMES AND SUPPORTS SHALL BE BONDED TO THE GROUND RING, IN ACCORDANCE WITH THE NEC.
19. BOND ALL METALLIC OBJECTS WITHIN 6 FT OF MAIN GROUND WIRES WITH 1-#2 AWG TIN-PLATED COPPER GROUND CONDUCTOR.
20. GROUND CONDUCTORS USED IN THE FACILITY GROUND AND LIGHTNING PROTECTION SYSTEMS SHALL NOT BE ROUTED THROUGH METALLIC OBJECTS THAT FORM A RING AROUND THE CONDUCTOR, SUCH AS METALLIC CONDUITS, METAL SUPPORT CLIPS OR SLEEVES THROUGH WALLS OR FLOORS. WHEN IT IS REQUIRED TO BE HOUSED IN CONDUIT TO MEET CODE REQUIREMENTS OR LOCAL CONDITIONS, NON-METALLIC MATERIAL SUCH AS PVC PLASTIC CONDUIT SHALL BE WHERE USE OF METAL CONDUIT IS UNAVOIDABLE (E.G. NON-METALLIC CONDUIT PROHIBITED BY LOCAL CODE) THE GROUND CONDUCTOR SHALL BE BONDED TO EACH END OF THE METAL CONDUIT.
21. ALL NEW STRUCTURES WITH A FOUNDATION AND/OR FOOTING HAVING 20 FT. OR MORE OF 1/4" IN. OR GREATER ELECTRICALLY CONDUCTIVE REINFORCING STEEL MUST HAVE IT BONDED TO THE GROUND RING USING AN EXOTHERMIC WELD CONNECTION USING #2 AWG SOLID BARE TINNED COPPER GROUND WIRE, PER NEC 250.50.
22. FOR THE PURPOSE OF CONSTRUCTION DRAWING, THE FOLLOWING DEFINITIONS SHALL APPLY:
    CONTRACTOR - SMARTLINK
    SUBCONTRACTOR - GENERAL CONTRACTOR (CONSTRUCTION)
    OWNER - AT&T (NEW CINGULAR WIRELESS PCS, LLC)
23. ALL SITE WORK SHALL BE COMPLETED AS INDICATED ON THE DRAWINGS AND PROJECT SPECIFICATIONS.
24. DRAWINGS PROVIDED HERE ARE NOT TO BE SCALED AND ARE INTENDED TO SHOW OUTLINE ONLY.
25. ALL MATERIALS FURNISHED AND INSTALLED SHALL BE IN STRICT ACCORDANCE WITH ALL APPLICABLE CODES, REGULATIONS, AND ORDINANCES. SUBCONTRACTOR SHALL ISSUE ALL APPROPRIATE NOTICES AND COMPLY WITH ALL LAWS, ORDINANCES, RULES, REGULATIONS, AND LAWFUL ORDERS OF ANY PUBLIC AUTHORITY REGARDING THE PERFORMANCE OF THE WORK.
26. ALL WORK CARRIED OUT SHALL COMPLY WITH ALL APPLICABLE MUNICIPAL AND UTILITY COMPANY SPECIFICATIONS AND LOCAL JURISDICTIONAL CODES, ORDINANCES AND APPLICABLE REGULATIONS.
27. UNLESS NOTED OTHERWISE, THE WORK SHALL INCLUDE FURNISHING MATERIALS, EQUIPMENT, APPURTENANCES, AND LABOR NECESSARY TO COMPLETE ALL INSTALLATIONS AS INDICATED ON THE DRAWINGS.
28. THE SUBCONTRACTOR SHALL INSTALL ALL EQUIPMENT AND MATERIALS IN ACCORDANCE WITH MANUFACTURER'S RECOMMENDATIONS UNLESS SPECIFICALLY STATED OTHERWISE.
29. IF THE SPECIFIED EQUIPMENT CANNOT BE INSTALLED AS SHOWN ON THESE DRAWINGS, THE SUBCONTRACTOR SHALL PROPOSE AN ALTERNATIVE INSTALLATION SPACE FOR APPROVAL BY THE CONTRACTOR.
30. THE SUBCONTRACTOR SHALL PROTECT EXISTING IMPROVEMENTS, PAVEMENTS, CURBS, LANDSCAPING AND STRUCTURES. ANY DAMAGED PART SHALL BE REPAIRED AT SUBCONTRACTOR'S EXPENSE TO THE SATISFACTION OF OWNER.
31. THE SUBCONTRACTOR SHALL CONTACT UTILITY LOCATING SERVICES PRIOR TO THE START OF CONSTRUCTION.
32. ALL EXISTING ACTIVE SEWER, WATER, GAS, ELECTRIC, AND OTHER UTILITIES WHERE ENCOUNTERED IN THE WORK, SHALL BE PROTECTED AT ALL TIMES, AND WHERE REQUIRED FOR THE PROPER EXECUTION OF THE WORK, SHALL BE RELOCATED AS DIRECTED BY THE RESPONSIBLE ENGINEER. EXTREME CAUTION SHOULD BE USED BY THE SUBCONTRACTOR WHEN EXCAVATING OR DRILLING PIERS AROUND OR NEAR UTILITIES. SUBCONTRACTOR SHALL PROVIDE SAFETY TRAINING FOR THE WORKING CREW. THIS WILL INCLUDE BUT NOT BE LIMITED TO A) FALL PROTECTION B) CONFINED SPACE C) ELECTRICAL SAFETY D) TRENCHING & EXCAVATION.
33. ALL EXISTING INACTIVE SEWER, WATER, GAS, ELECTRIC AND OTHER UTILITIES, WHICH INTERFERE WITH THE EXECUTION OF THE WORK, SHALL BE REMOVED AND/OR CAPPED, PLUGGED OR OTHERWISE DISCONTINUED AT POINTS WHICH WILL NOT INTERFERE WITH THE EXECUTION OF THE WORK, AS DIRECTED BY THE RESPONSIBLE ENGINEER, AND SUBJECT TO THE APPROVAL OF THE OWNER AND/OR LOCAL UTILITIES.
34. THE AREAS OF THE OWNER'S PROPERTY DISTURBED BY THE WORK AND NOT COVERED BY THE TOWER, EQUIPMENT OR DRIVEWAY SHALL BE GRADED TO A UNIFORM SLOPE AND STABILIZED TO PREVENT EROSION.
35. SUBCONTRACTOR SHALL MINIMIZE DISTURBANCE TO EXISTING SITE DURING CONSTRUCTION. EROSION CONTROL MEASURES, IF REQUIRED DURING CONSTRUCTION, SHALL BE IN CONFORMANCE WITH THE LOCAL GUIDELINES FOR EROSION AND SEDIMENT CONTROL.
36. NO FILL OR EMBANKMENT MATERIAL SHALL BE PLACED ON FROZEN GROUND. FROZEN MATERIALS, SNOW OR ICE SHALL NOT BE PLACED IN ANY FILL OR EMBANKMENT.
37. THE SUBGRADE SHALL BE COMPACTED AND BROUGHT TO A SMOOTH UNIFORM GRADE PRIOR TO FINISHED SURFACE APPLICATION.
38. THE SITE SHALL BE GRADED TO CAUSE SURFACE WATER TO FLOW AWAY FROM THE BTS EQUIPMENT AND TOWER AREAS.
39. IF NECESSARY, RUBBISH, STUMPS, DEBRIS, STICKS, STONES AND OTHER REFUSE SHALL BE REMOVED FROM THE SITE AND DISPOSED OF LEGALLY.
40. THE SUBCONTRACTOR SHALL PROVIDE SITE SIGNAGE IN ACCORDANCE WITH THE TECHNICAL SPECIFICATION FOR SITE SIGNAGE.
41. SUBCONTRACTOR SHALL LEAVE PREMISES IN CLEAN CONDITION.
42. PRIOR TO THE SUBMISSION OF BIDS, THE BIDDING SUBCONTRACTOR SHALL VISIT THE CELL SITE TO FAMILIARIZE WITH THE EXISTING CONDITIONS AND TO CONSTRUCTION DRAWINGS. ANY DISCREPANCY FOUND SHALL BE BROUGHT TO THE ATTENTION OF THE CONTRACTOR.
43. SUBCONTRACTOR SHALL DETERMINE ACTUAL ROUTING OF CONDUIT, POWER AND T1 CABLES, GROUNDING CABLES AS SHOWN ON THE POWER, GROUNDING AND TELCO PLAN DRAWING. SUBCONTRACTOR SHALL UTILIZE EXISTING TRAYS AND/OR SHALL ADD NEW TRAYS AS NECESSARY. SUBCONTRACTOR SHALL CONFIRM THE ACTUAL ROUTING WITH THE CONTRACTOR.
44. ALL CONCRETE REPAIR WORK SHALL BE DONE IN ACCORDANCE WITH AMERICAN CONCRETE INSTITUTE (ACI) 301.
45. ANY NEW CONCRETE NEEDED FOR THE CONSTRUCTION SHALL BE AIR-ENTRAINED AND SHALL HAVE 4000 PSI STRENGTH AT 28 DAYS.
46. ALL STRUCTURAL STEEL WORK SHALL BE DETAILED, FABRICATED AND ERECTED IN ACCORDANCE WITH AISC SPECIFICATIONS. ALL STRUCTURAL STEEL SHALL BE ASTM A36 (FY = 36 KSI) UNLESS OTHERWISE NOTED. PIPES SHALL BE ASTM A53 TYPE E (FY = 36 KSI). ALL STEEL EXPOSED TO WEATHER SHALL BE HOT DIPPED GALVANIZED. TOUCHUP ALL SCRATCHES AND OTHER MARKS IN THE FIELD AFTER STEEL IS ERECTED USING A COMPATIBLE ZINC RICH PAINT.
47. CONSTRUCTION SHALL COMPLY WITH SPECIFICATIONS AND "GENERAL CONSTRUCTION SERVICES FOR CONSTRUCTION OF AT&T MOBILITY SITES."
48. SUBCONTRACTOR SHALL VERIFY ALL EXISTING DIMENSIONS AND CONDITIONS PRIOR TO COMMENCING ANY WORK. ALL DIMENSIONS OF EXISTING CONSTRUCTION SHOWN ON THE DRAWINGS MUST BE VERIFIED. SUBCONTRACTOR SHALL NOTIFY THE CONTRACTOR OF ANY DISCREPANCIES PRIOR TO ORDERING MATERIAL OR PROCEEDING WITH CONSTRUCTION.
49. THE EXISTING CELL SITE IS IN FULL COMMERCIAL OPERATION, ANY CONSTRUCTION WORK BY SUBCONTRACTOR SHALL NOT DISRUPT THE EXISTING NORMAL OPERATION. ANY WORK ON EXISTING EQUIPMENT MUST BE COORDINATED WITH CONTRACTOR. ALSO, WORK SHOULD BE SCHEDULED FOR AN APPROPRIATE MAINTENANCE WINDOW USUALLY IN LOW TRAFFIC PERIODS AFTER MIDNIGHT.
50. SINCE THE CELL SITE IS ACTIVE, ALL SAFETY PRECAUTIONS MUST BE TAKEN WHEN WORKING AROUND HIGH LEVELS OF ELECTROMAGNETIC RADIATION. EQUIPMENT SHOULD BE SHUTDOWN PRIOR TO PERFORMING ANY WORK THAT COULD EXPOSE THE WORKERS TO DANGER. PERSONAL RF EXPOSURE MONITORS ARE ADVISED TO BE WORN ALERT OF DANGEROUS EXPOSURE LEVELS.

at&t

smartlink

85 RANGEWAY ROAD - BLDG 3, SUITE 102
NORTH BILLERICA, MA 01862
SMARTLINKLLC.COM

RAMAKER & ASSOCIATES, INC.
100% EMPLOYEE-OWNED
855 Community Dr, Sauk City, WI 53583
608-643-4100 www.Ramaker.com
Sauk City, WI • Willmar, MN
Woodcliff Lake, NJ • Bayamon, PR

Certification & Seal:
I hereby certify that this plan, specification, or report was prepared by me or under my direct supervision and that I am a duly Licensed Professional Engineer under the laws of the State of Massachusetts.

COMMONWEALTH OF MASSACHUSETTS
JAMES R. SKOWRONSKI
CIVIL
No. 47833
REGISTERED PROFESSIONAL ENGINEER

Registered Civil Engineer Signature: Date: 11/13/2019

MARK	DATE	DESCRIPTION
2	11/13/19	FINAL CDs REVISED PER COMMENTS
1	11/06/19	FINAL CDs ISSUED
0	09/26/19	CDs ISSUED FOR REVIEW

ISSUE PHASE: FINAL — DATE ISSUED: 11/13/2019

PROJECT TITLE:
SOUTH TRURO
FA# 10014237
SITE# MAL01061

PROJECT INFORMATION:
5 TOWN DUMP ROAD
TRURO, MA 02666
BARNSTABLE COUNTY

SHEET TITLE:
NOTES

SCALE: NONE

PROJECT NUMBER: 45315
SHEET NUMBER: GN-1

This document contains confidential or proprietary information of Ramaker & Associates, Inc. Neither this document nor the information herein is to be reproduced, distributed, used or disclosed either in whole or in part except as authorized by Ramaker and Associates, Inc.

© Copyright 2019 - Ramaker & Associates, Inc. - All Rights Reserved
DRAWN BY: BTL CHECKED BY: AJK

I:\45300\45315\CAD\45315_10014237_AE201_190916_MA1061_Rev0_3C-4C_Retrofit.dwg Printed by: amaurtua on Nov 13, 2019 - 12:26pm

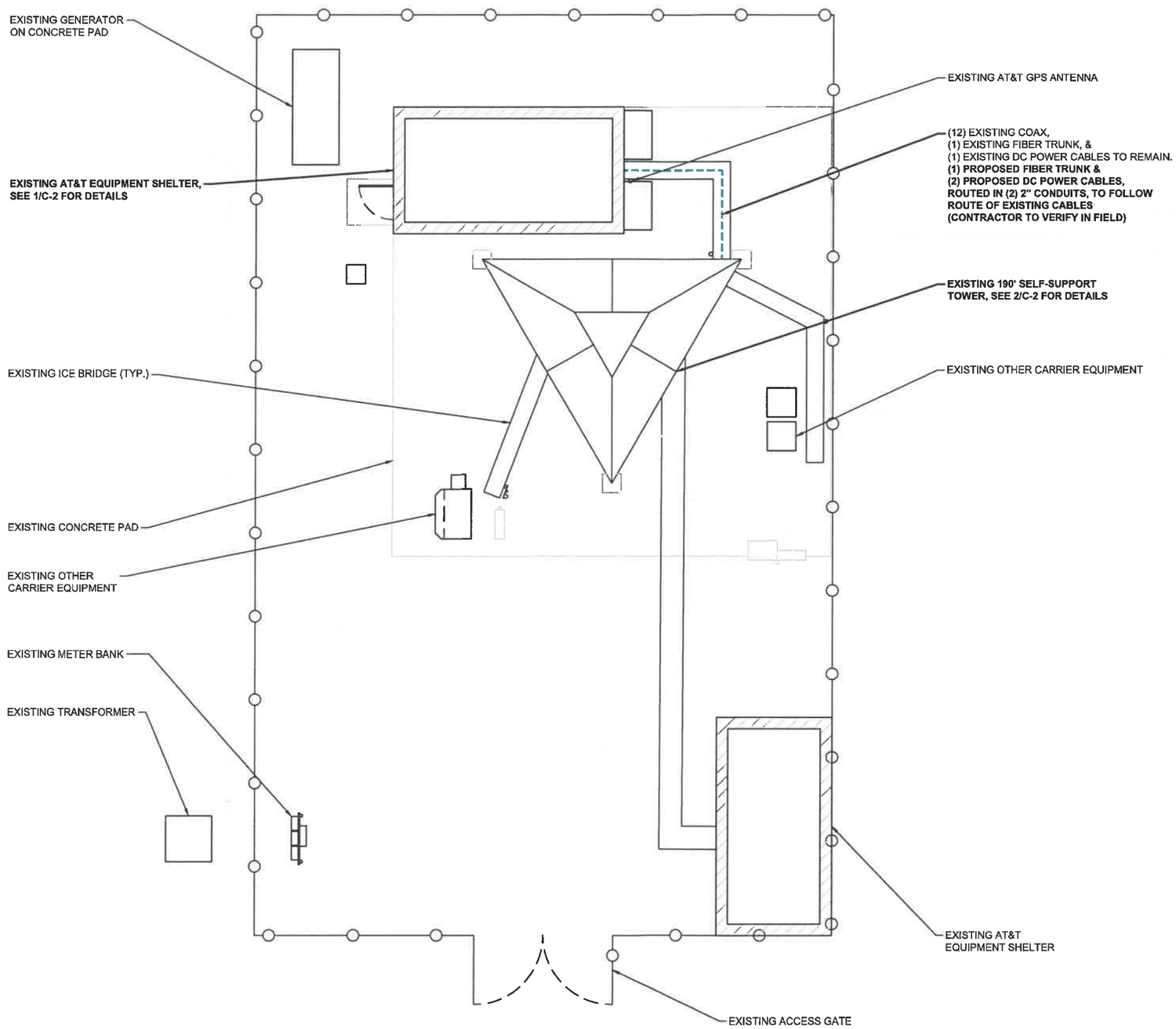

COMPOUND PLAN (1)
SCALE: 1" = 10'

at&t

smartlink
85 RANGEWAY ROAD - BLDG 3, SUITE 102
NORTH BILLERICA, MA 01862
SMARTLINKLLC.COM

RAMAKER & ASSOCIATES, INC.
100% EMPLOYEE-OWNED
855 Community Dr, Sauk City, WI 53583
608-643-4100 www.Ramaker.com
Sauk City, WI • Willmar, MN
Woodcliff Lake, NJ • Bayamon, PR

Certification & Seal:
I hereby certify that this plan, specification, or report was prepared by me or under my direct supervision and that I am a duly Licensed Professional Engineer under the laws of the State of Massachusetts.

COMMONWEALTH OF MASSACHUSETTS
JAMES R. SKOWRONSKI
CIVIL
No. 47833
REGISTERED PROFESSIONAL ENGINEER

Registered Civil Engineer Signature: Date: 11/13/2019

MARK	DATE	DESCRIPTION
2	11/13/19	FINAL CDs REVISED PER COMMENTS
1	11/06/19	FINAL CDs ISSUED
0	09/26/19	CDs ISSUED FOR REVIEW

ISSUE PHASE: FINAL — DATE ISSUED: 11/13/2019

PROJECT TITLE:
SOUTH TRURO
FA# 10014237
SITE# MAL01061

PROJECT INFORMATION:
5 TOWN DUMP ROAD
TRURO, MA 02666
BARNSTABLE COUNTY

SHEET TITLE:
COMPOUND PLAN

0 5' 10' 20'
11" x 17" - 1" = 10'
22" x 34" - 1" = 5'

PROJECT NUMBER: 45315
SHEET NUMBER: C-1

This document contains confidential or proprietary information of Ramaker & Associates, Inc. Neither this document nor the information herein is to be reproduced, distributed, used or disclosed either in whole or in part except as authorized by Ramaker and Associates, Inc.

© Copyright 2019 - Ramaker & Associates, Inc. - All Rights Reserved
DRAWN BY: BTL CHECKED BY: AJK

I:\45300\45315\CAD\45315_10014237_AE201_190916_MA1061_Rev0_3C-4C_Retrofit.dwg Printed by: amaurtua on Nov 13, 2019 - 12:26pm

NORTH

NOTE:
REPLACE BB WITH (2) 6630 & IDLe

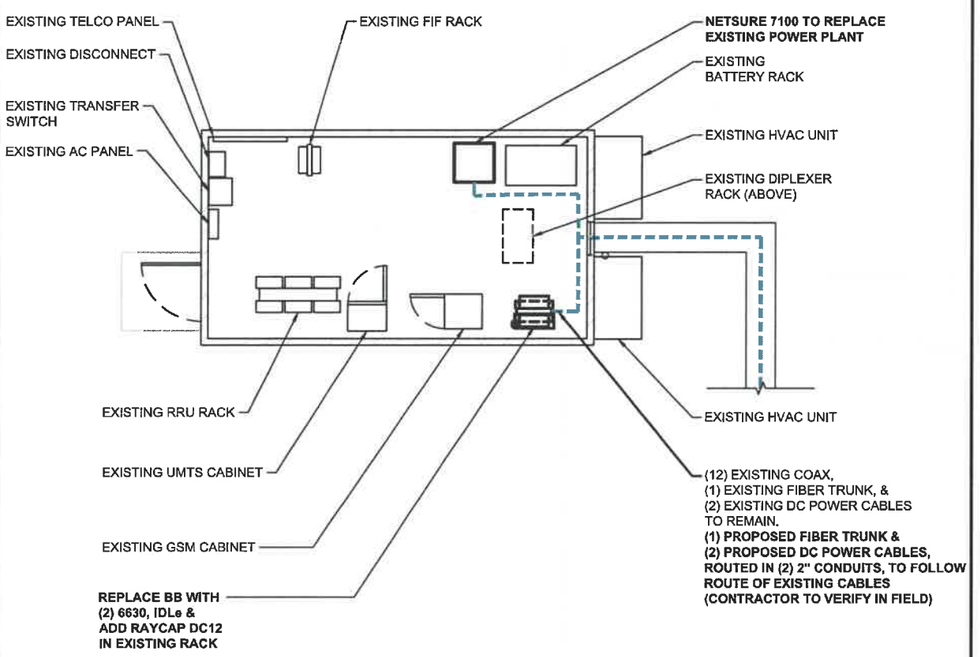

EQUIPMENT LAYOUT (1)
SCALE: 1" = 7.5'

NOTE:
A MOUNT ASSESSMENT OF THE ANTENNA AND EQUIPMENT MOUNTING STRUCTURE HAS BEEN COMPLETED BY RAMAKER & ASSOCIATES, INC., DATED SEPTEMBER 26, 2019.

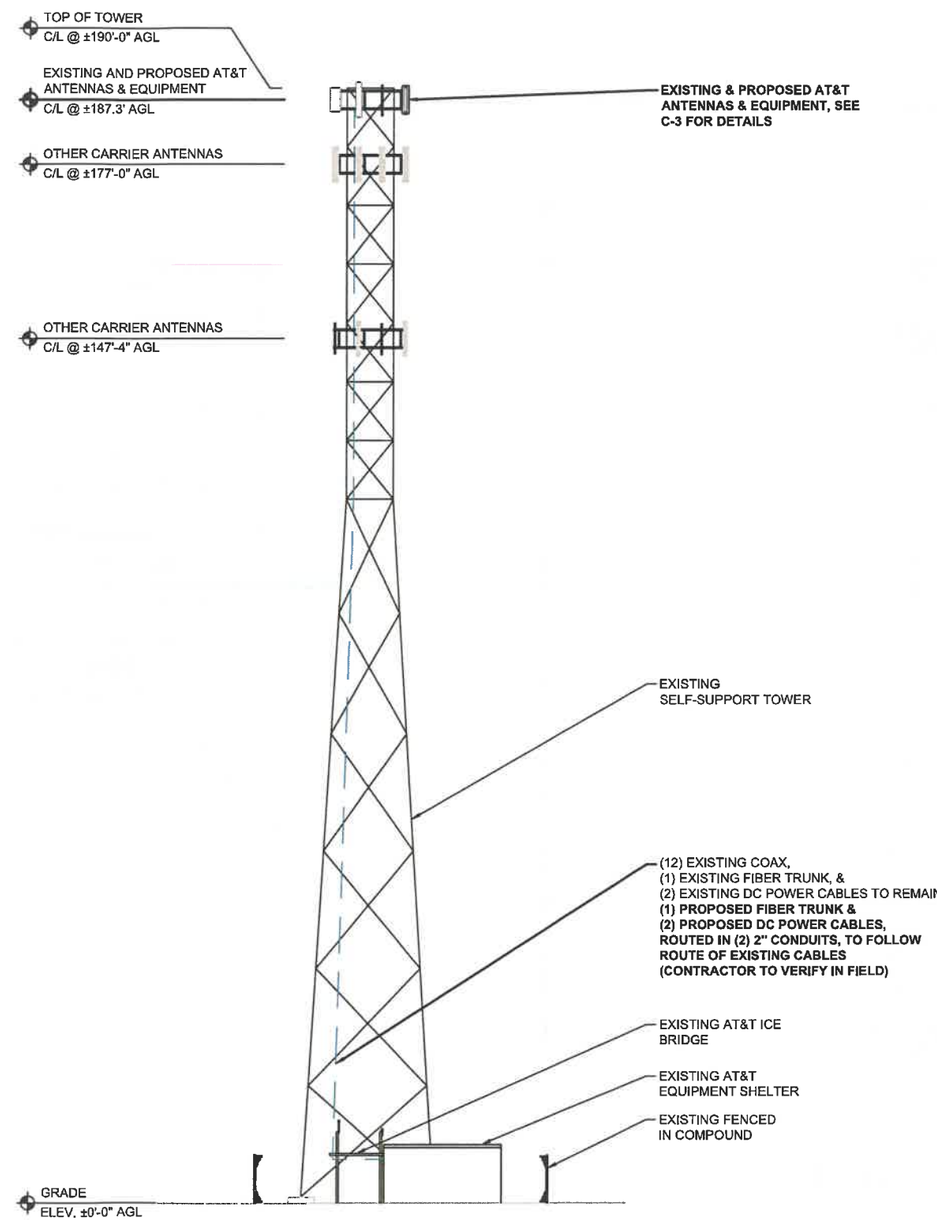

ELEVATION VIEW (2)
SCALE: 1" = 25'

at&t

smartlink
85 RANGEWAY ROAD - BLDG 3, SUITE 102
NORTH BILLERICA, MA 01862
SMARTLINKLLC.COM

RAMAKER & ASSOCIATES, INC.
100% EMPLOYEE-OWNED
855 Community Dr, Sauk City, WI 53583
608-643-4100 www.Ramaker.com
Sauk City, WI • Willmar, MN
Woodcliff Lake, NJ • Bayamon, PR

Certification & Seal:
I hereby certify that this plan, specification, or report was prepared by me or under my direct supervision and that I am a duly licensed Professional Engineer under the laws of the State of Massachusetts.

COMMONWEALTH OF MASSACHUSETTS
JAMES R. SKOWRONSKI
CIVIL
No. 47833
REGISTERED PROFESSIONAL ENGINEER

Registered Civil Engineer Signature: Date: 11/13/2019

MARK	DATE	DESCRIPTION
2	11/13/19	FINAL CDs REVISED PER COMMENTS
1	11/06/19	FINAL CDs ISSUED
0	09/26/19	CDs ISSUED FOR REVIEW

ISSUE PHASE: FINAL DATE ISSUED: 11/13/2019

PROJECT TITLE:
SOUTH TRURO
FA# 10014237
SITE# MAL01061

PROJECT INFORMATION:
5 TOWN DUMP ROAD
TRURO, MA 02666
BARNSTABLE COUNTY

SHEET TITLE:
EQUIPMENT LAYOUT AND ELEVATION VIEW

SCALE:
AS NOTED

PROJECT NUMBER: 45315
SHEET NUMBER: C-2

This document contains confidential or proprietary information of Ramaker & Associates, Inc. Neither this document nor the information herein is to be reproduced, distributed, used or disclosed either in whole or in part except as authorized by Ramaker and Associates, Inc.

© Copyright 2019 - Ramaker & Associates, Inc. - All Rights Reserved
DRAWN BY: BTL CHECKED BY: AJK

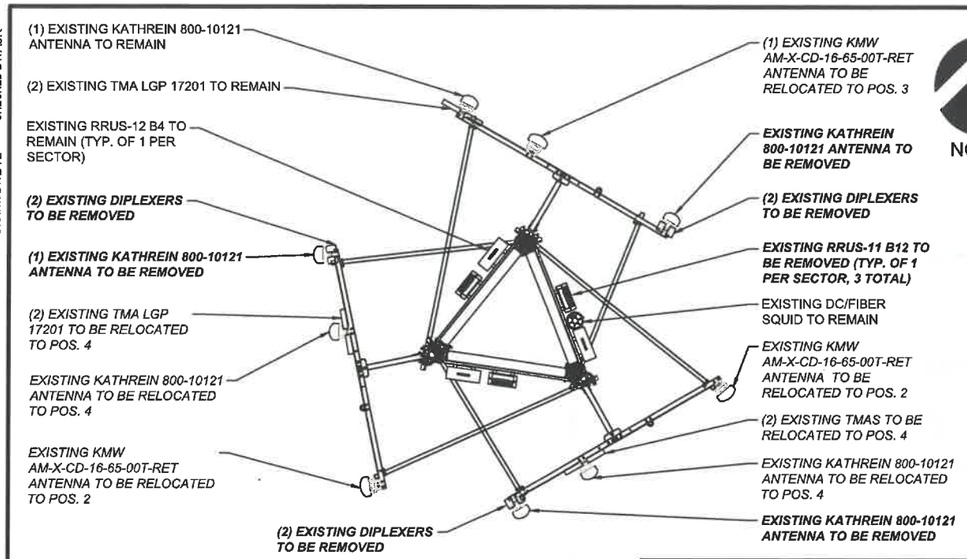

EXISTING ANTENNA LAYOUT (1)

SCALE: NTS

NOTES:
- -3 FEET MINIMUM SEPARATION BETWEEN LTE ANTENNAS
- -6 FEET MINIMUM SEPARATION BETWEEN 700 BC & 700 DE ANTENNAS
- -8 INCH MINIMUM SEPARATION BETWEEN BACK OF PANEL ANTENNA AND EXISTING/PROPOSED EQUIPMENT

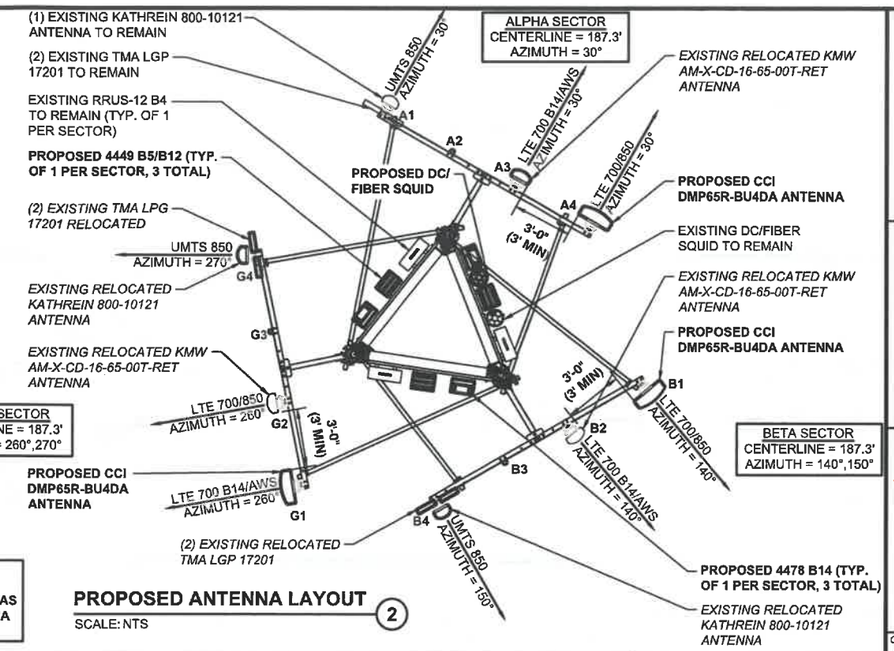

PROPOSED ANTENNA LAYOUT (2)

SCALE: NTS

BASED ON: RF ENGINEERING DESIGN ENTITLED "NEW-ENGLAND_BOSTON_MA1061_2020-LTE-NEXT-CARRIER_LTE_MR673A_2101A0PQNJ_10014237_76840_05-07-2019_FINAL-APPROVED_V4.00" LAST REVISED 10/29/2019.

SECTOR		EXISTING ANTENNA	PROPOSED ANTENNA	TECHNOLOGY	ANTENNA STATUS	HEIGHT (IN.)	WIDTH (IN.)	DEPTH (IN.)	WEIGHT (LBS.)	ANTENNA AZIMUTH (DEG.)	ANT. C/L ELEV. (FT.)	REMOTE RADIO/TMA CONFIGURATION	TRANSMISSION CABLE QUANTITY	TRANSMISSION CABLE TYPE	TRANSMISSION CABLE STATUS	RAYCAP UNIT
SECTOR 1	1	KATHREIN 800-10121	KATHREIN 800-10121	UMTS 850	EXISTING	54.5	10.3	5.9	44.1	30	187.3	(2) TMA - LGP 17201	2	COAX	EXISTING	(1) EXISTING DC/FIBER SQUID (1) PROPOSED DC9 DC/FIBER SQUID
	2	(RELOCATE) KMW AM-X-CD-16-65-00T-RET	-	-	VACANT	-	-	-	-	-	-	-	2	COAX	EXISTING	
	3	- -	KMW AM-X-CD-16-65-00T-RET	LTE 700 B14 / AWS	RELOCATED	48.0	11.8	5.9	48.5	30	187.3	(1) RRUS-11 B12 (REMOVE) (1) RRUS-12 B4 (1) 4478 B14	1 2	FIBER TRUNK DC POWER	EXISTING	
	4	KATHREIN 800-10121	CCI DMP65R-BU4DA	LTE 700 / 850	PROPOSED	48.0	20.7	7.7	67.9	30	187.3	(1) 4449 B5/B12	1 2	FIBER TRUNK DC POWER	PROPOSED	
SECTOR 2	1	(RELOCATE) KMW AM-X-CD-16-65-00T-RET	CCI DMP65R-BU4DA	LTE 700 / 850	PROPOSED	48.0	20.7	7.7	67.9	140	187.3	(1) RRUS-11 B12 (REMOVE) (1) 4449 B5/B12	(SHARED)			
	2	- -	KMW AM-X-CD-16-65-00T-RET	LTE 700 B14 / AWS	RELOCATED	72	11.8	5.9	48.5	140	187.3	(1) RRUS-12 B4 (RELOCATED) (1) 4478 B14	(SHARED)			
	3	(RELOCATE) KATHREIN 800-10121	- -	-	VACANT	-	-	-	-	-	-	- -	2	COAX	EXISTING	
	4	(REMOVE) KATHREIN 800-10121	KATHREIN 800-10121	UMTS 850	RELOCATED	54.5	10.3	5.9	44.1	150	187.3	(2) TMA - LGP 17201	2	COAX	EXISTING	
SECTOR 3	1	KMW AM-X-CD-16-65-00T-RET	CCI DMP65R-BU4DA	LTE 700 / 850	PROPOSED	48.0	20.7	7.7	67.9	260	187.3	(1) RRUS-11 B12 (REMOVE) (1) 4449 B5/B12	(SHARED)			
	2	- -	KMW AM-X-CD-16-65-00T-RET	LTE 700 B14 / AWS	RELOCATED	72	11.8	5.9	48.5	260	187.3	(1) RRUS-12 B4 (RELOCATED) (1) 4478 B14	(SHARED)			
	3	(RELOCATE) KATHREIN 800-10121	- -	-	VACANT	-	-	-	-	-	-	- -	2	COAX	EXISTING	
	4	(REMOVE) KATHREIN 800-10121	KATHREIN 800-10121	UMTS 850	RELOCATED	54.5	10.3	5.9	44.1	270	187.3	(2) TMA - LGP 17201	2	COAX	EXISTING	

ANTENNA SCHEDULE (3)

SCALE: NTS

at&t

smartlink
85 RANGEWAY ROAD - BLDG 3, SUITE 102
NORTH BILLERICA, MA 01862
SMARTLINKLLC.COM

RAMAKER & ASSOCIATES, INC.
100% EMPLOYEE-OWNED
855 Community Dr, Sauk City, WI 53583
608-643-4100 www.Ramaker.com
Sauk City, WI • Willmar, MN
Woodcliff Lake, NJ • Bayamon, PR

Certification & Seal:
I hereby certify that this plan, specification, or report was prepared by me or under my direct supervision and that I am a duly Licensed Professional Engineer under the laws of the State of Massachusetts.

COMMONWEALTH OF MASSACHUSETTS
JAMES R. SKOWRONSKI
CIVIL
No. 47833
REGISTERED PROFESSIONAL ENGINEER

Registered Civil Engineer Signature: Date: 11/13/2019

MARK	DATE	DESCRIPTION
2	11/13/19	FINAL CDs REVISED PER COMMENTS
1	11/06/19	FINAL CDs ISSUED
0	09/26/19	CDs ISSUED FOR REVIEW

ISSUE PHASE: FINAL — DATE ISSUED: 11/13/2019

PROJECT TITLE:
SOUTH TRURO
FA# 10014237
SITE# MAL01061

PROJECT INFORMATION:
5 TOWN DUMP ROAD
TRURO, MA 02666
BARNSTABLE COUNTY

SHEET TITLE:
ANTENNA LAYOUTS AND ANTENNA SCHEDULE

SCALE: NONE

PROJECT NUMBER: 45315
SHEET NUMBER: C-3

This document contains confidential or proprietary information of Ramaker & Associates, Inc. Neither this document nor the information herein is to be reproduced, distributed, used or disclosed either in whole or in part except as authorized by Ramaker and Associates, Inc.

I:\45300\45315\CAD\45315_10014237_AE201_190916_MA1061_Rev0_3C-4C_Retrofit.dwg Printed by: amaurtua on Nov 13, 2019 - 12:26pm

© Copyright 2019 - Ramaker & Associates, Inc. - All Rights Reserved
DRAWN BY: BTL CHECKED BY: AJK

NOTES:
-3 FEET MINIMUM SEPARATION BETWEEN LTE ANTENNAS

-8 INCH MINIMUM SEPARATION BETWEEN BACK OF PANEL ANTENNA AND EXISTING/PROPOSED EQUIPMENT

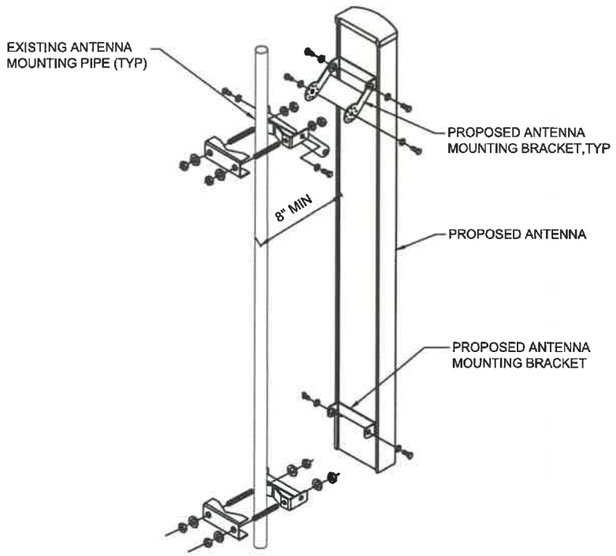

ANTENNA MOUNTING DETAIL (1)
SCALE: NTS

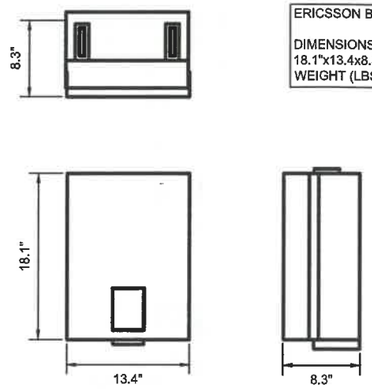

ERICSSON B14 4478

DIMENSIONS (HxWxD):
18.1"x13.4x8.3"
WEIGHT (LBS): 59.4

RRUS B14 4478 DETAIL (2)
SCALE: NTS

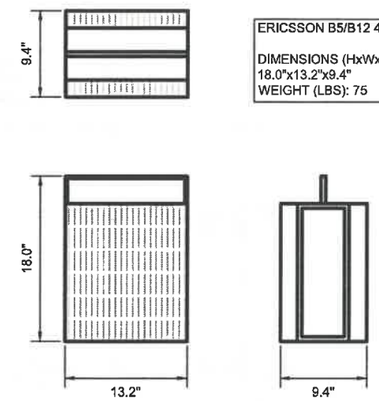

ERICSSON B5/B12 4449

DIMENSIONS (HxWxD):
18.0"x13.2"x9.4"
WEIGHT (LBS): 75

RRUS B5/B12 4449 DETAIL (3)
SCALE: NTS

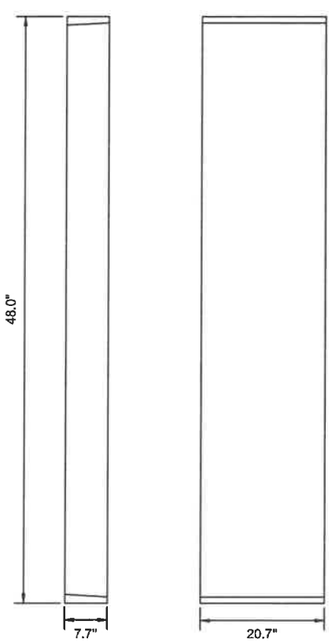

CCI DMP65R-BU4DA

DIMENSIONS (HxWxD):
48.0"x20.7"x7.7"
WEIGHT (LBS): 67.9

ANTENNA DETAIL (4)
SCALE: NTS

EXISTING RRUS-12 B4 TO REMAIN MOUNTED ON EXISTING UNISTRUT ON TOWER FACE

PROPOSED SQUID, 4449 B5/B12 & 4478 B14 TO BE MOUNTED ON EXISTING UNISTRUT ON TOWER FACE

EXISTING RRUS-11 B12 MOUNTED ON EXISTING UNISTRUT ON TOWER FACE TO BE REMOVED

RRU & SQUID MOUNTING DETAIL (5)
SCALE: NTS

at&t

smartlink
85 RANGEWAY ROAD - BLDG 3, SUITE 102
NORTH BILLERICA, MA 01862
SMARTLINKLLC.COM

RAMAKER & ASSOCIATES, INC.
100% EMPLOYEE-OWNED
855 Community Dr, Sauk City, WI 53583
608-643-4100 www.Ramaker.com
Sauk City, WI • Willmar, MN
Woodcliff Lake, NJ • Bayamon, PR

Certification & Seal:
I hereby certify that this plan, specification, or report was prepared by me or under my direct supervision and that I am a duly licensed Professional Engineer under the laws of the State of Massachusetts.

COMMONWEALTH OF MASSACHUSETTS
JAMES R. SKOWRONSKI
CIVIL
No. 47833
REGISTERED PROFESSIONAL ENGINEER

Registered Civil Engineer Signature: Date: 11/13/2019

MARK	DATE	DESCRIPTION
2	11/13/19	FINAL CDs REVISED PER COMMENTS
1	11/06/19	FINAL CDs ISSUED
0	09/26/19	CDs ISSUED FOR REVIEW

ISSUE PHASE: FINAL — DATE ISSUED: 11/13/2019

PROJECT TITLE:
SOUTH TRURO
FA# 10014237
SITE# MAL01061

PROJECT INFORMATION:
5 TOWN DUMP ROAD
TRURO, MA 02666
BARNSTABLE COUNTY

SHEET TITLE:
CONSTRUCTION DETAILS

SCALE: NONE

PROJECT NUMBER: 45315
SHEET NUMBER: A-1

This document contains confidential or proprietary information of Ramaker & Associates, Inc. Neither this document nor the information herein is to be reproduced, distributed, used or disclosed either in whole or in part except as authorized by Ramaker and Associates, Inc.

I:\45300\45315\CAD\45315_10014237_AE201_190916_MA1061_Rev0_3C-4C_Retrofit.dwg Printed by: amaurtua on Nov 13, 2019 - 12:26pm

© Copyright 2019 - Ramaker & Associates, Inc. - All Rights Reserved
DRAWN BY: BTL CHECKED BY: AJK

I:\45300\45315\CAD\45315_10014237_AE201_190916_MA1061_Rev0_3C-4C_Retrofit.dwg Printed by: amaurtua on Nov 13, 2019 - 12:26pm

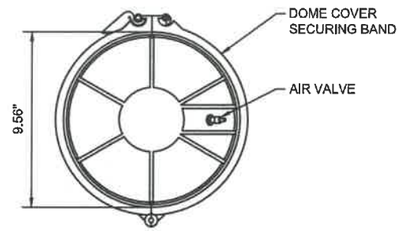

TOP VIEW

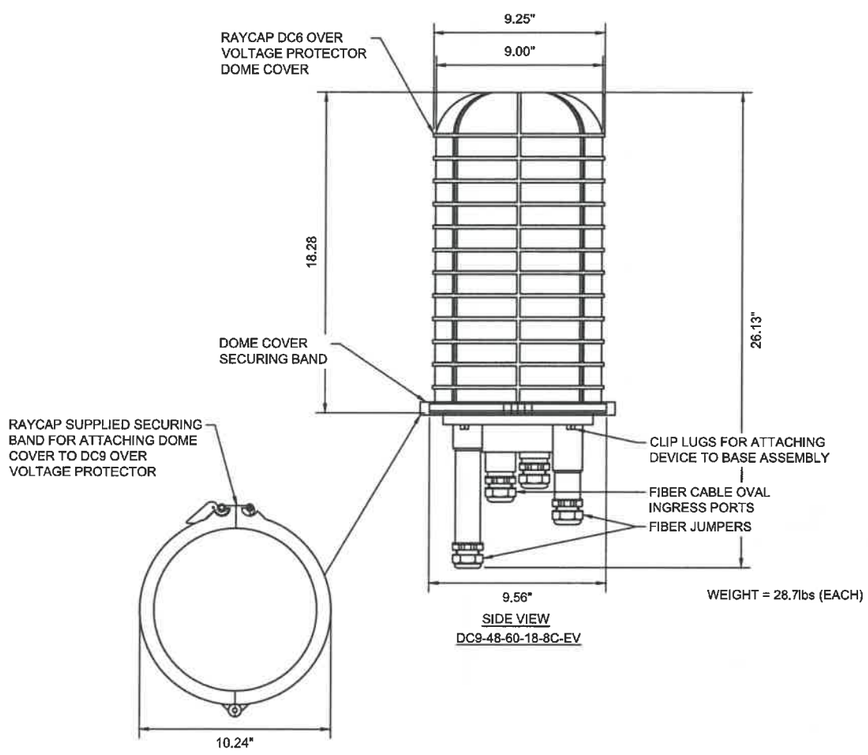

SIDE VIEW
DC9-48-60-18-8C-EV

DC9 SURGE SUPPRESSION DOME (1)
SCALE: NTS

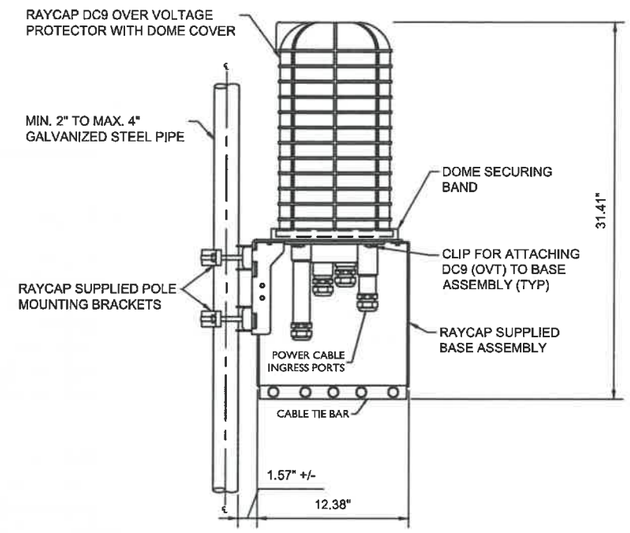

NOTE:
RAYCAP VIA AT&T SUPPLIES THE DC9 OVER VOLTAGE PROTECTOR AND PIPE MOUNTING BRACKETS. SUBCONTRACTOR SHALL SUPPLY THE PIPE

DC9 SURGE SUPPRESSION DOME
POLE MOUNT ASSEMBLY
NOT TO SCALE

DC9 SURGE SUPPRESSION DOME POLE MOUNT ASSEMBLY (2)
SCALE: NTS

at&t

smartlink

85 RANGEWAY ROAD - BLDG 3, SUITE 102
NORTH BILLERICA, MA 01862
SMARTLINKLLC.COM

RAMAKER & ASSOCIATES, INC.
100% EMPLOYEE-OWNED
855 Community Dr, Sauk City, WI 53583
608-643-4100 www.Ramaker.com
Sauk City, WI • Willmar, MN
Woodcliff Lake, NJ • Bayamon, PR

Certification & Seal:
I hereby certify that this plan, specification, or report was prepared by me or under my direct supervision and that I am a duly licensed Professional Engineer under the laws of the State of Massachusetts.

COMMONWEALTH OF MASSACHUSETTS
JAMES R. SKOWRONSKI
CIVIL
No. 47833
REGISTERED PROFESSIONAL ENGINEER

Registered Civil Engineer Signature: Date: 11/13/2019

MARK	DATE	DESCRIPTION
2	11/13/19	FINAL CDs REVISED PER COMMENTS
1	11/06/19	FINAL CDs ISSUED
0	09/26/19	CDs ISSUED FOR REVIEW

ISSUE PHASE: FINAL — DATE ISSUED: 11/13/2019

PROJECT TITLE:
SOUTH TRURO
FA# 10014237
SITE# MAL01061

PROJECT INFORMATION:
5 TOWN DUMP ROAD
TRURO, MA 02666
BARNSTABLE COUNTY

SHEET TITLE:
CONSTRUCTION DETAILS

SCALE: NONE

PROJECT NUMBER: 45315
SHEET NUMBER: A-2

This document contains confidential or proprietary information of Ramaker & Associates, Inc. Neither this document nor the information herein is to be reproduced, distributed, used or disclosed either in whole or in part except as authorized by Ramaker and Associates, Inc.

© Copyright 2019 - Ramaker & Associates, Inc. - All Rights Reserved
DRAWN BY: BTL CHECKED BY: AJK

I:\45300\45315\CAD\45315_10014237_AE201_190916_MA1061_Rev0_3C-4C_Retrofit.dwg Printed by: amaurtua on Nov 13, 2019 - 12:26pm

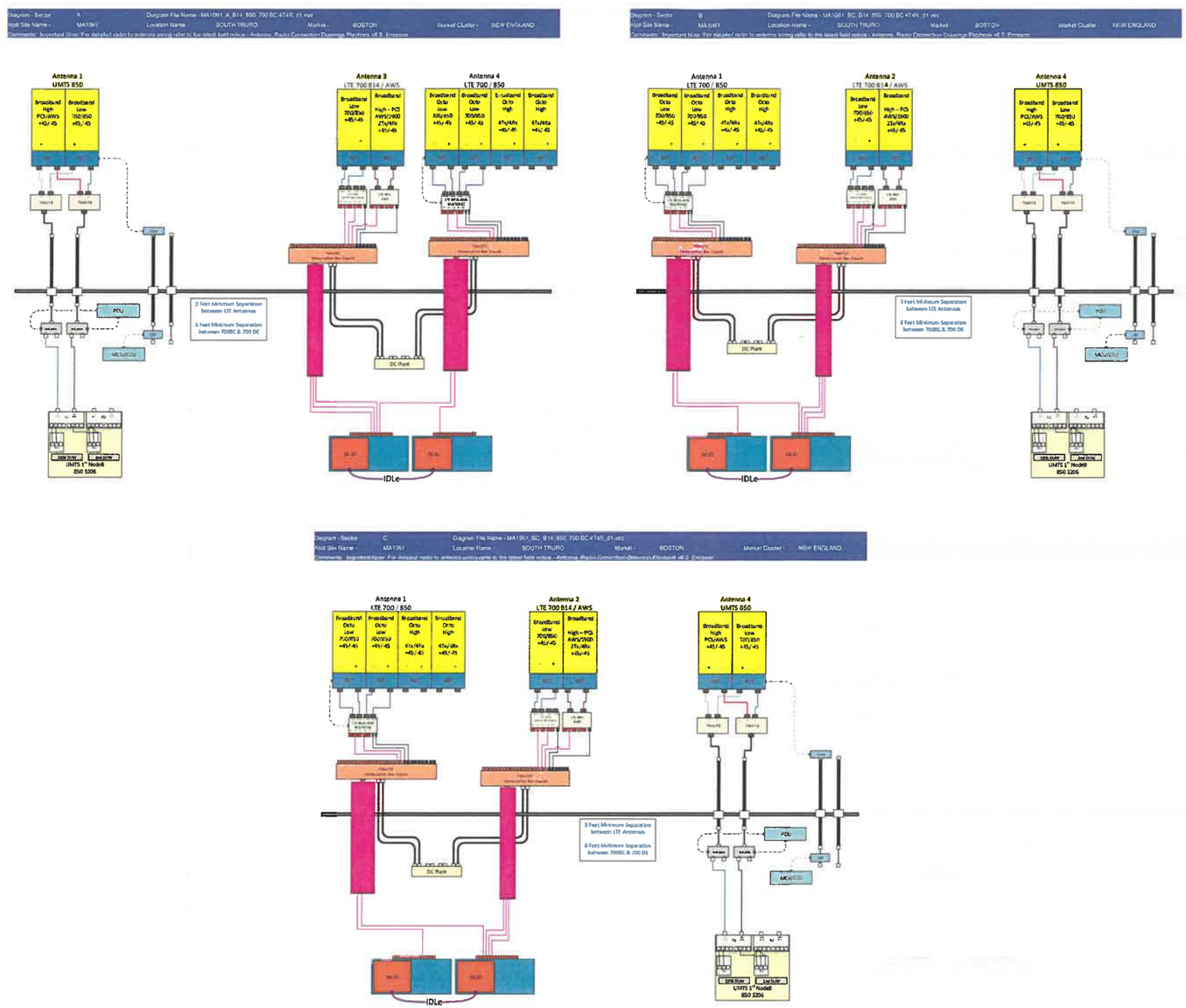

BASED ON: RF ENGINEERING DESIGN ENTITLED "NEW-ENGLAND_BOSTON_MA1061_2020-LTE-NEXT-CARRIER_LTE_MR673A_2101A0PQNJ_10014237_76840_05-07-2019_FINAL-APPROVED_V4.00" LAST REVISED 10/29/2019.

RF PLUMBING DIAGRAMS (1)

SCALE: NTS

at&t

smartlink

85 RANGEWAY ROAD - BLDG 3, SUITE 102
NORTH BILLERICA, MA 01862
SMARTLINKLLC.COM

RAMAKER & ASSOCIATES, INC.
100% EMPLOYEE-OWNED
855 Community Dr, Sauk City, WI 53583
608-643-4100 www.Ramaker.com
Sauk City, WI • Willmar, MN
Woodcliff Lake, NJ • Bayamon, PR

Certification & Seal:
I hereby certify that this plan, specification, or report was prepared by me or under my direct supervision and that I am a duly Licensed Professional Engineer under the laws of the State of Massachusetts.

COMMONWEALTH OF MASSACHUSETTS
JAMES R. SKOWRONSKI
CIVIL
No. 47833
REGISTERED PROFESSIONAL ENGINEER

Registered Civil Engineer Signature: Date: 11/13/2019

MARK	DATE	DESCRIPTION
2	11/13/19	FINAL CDs REVISED PER COMMENTS
1	11/06/19	FINAL CDs ISSUED
0	09/26/19	CDs ISSUED FOR REVIEW

ISSUE PHASE: FINAL — DATE ISSUED: 11/13/2019

PROJECT TITLE:
SOUTH TRURO
FA# 10014237
SITE# MAL01061

PROJECT INFORMATION:
5 TOWN DUMP ROAD
TRURO, MA 02666
BARNSTABLE COUNTY

SHEET TITLE:
RF PLUMBING DIAGRAMS

SCALE: NONE

PROJECT NUMBER: 45315
SHEET NUMBER: A-3

This document contains confidential or proprietary information of Ramaker & Associates, Inc. Neither this document nor the information herein is to be reproduced, distributed, used or disclosed either in whole or in part except as authorized by Ramaker and Associates, Inc.

© Copyright 2019 - Ramaker & Associates, Inc. - All Rights Reserved
DRAWN BY: BTL CHECKED BY: AJK

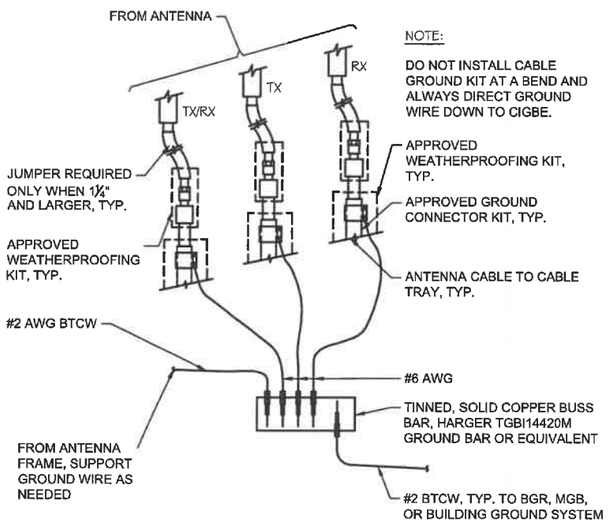

NOTE:

DO NOT INSTALL CABLE GROUND KIT AT A BEND AND ALWAYS DIRECT GROUND WIRE DOWN TO CIGBE.

GROUND WIRE TO GROUND BAR DETAIL (1)

SCALE: NTS

NOTES:

1. ALL MOUNTING HARDWARE CAN BE USED ON 6", 12", 18", ETC. GROUND BARS.
2. ENTIRE ASSEMBLY AVAILABLE FROM NEWTON INSTRUMENT CO. CAT. NO. 2106060010 OR AS HARGER TGBI14420M.

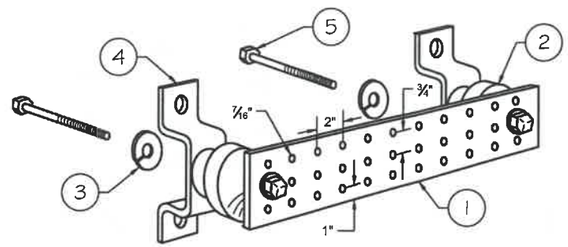

LEGEND

1. TINNED COPPER GROUND BAR, ¼" x 4" x 20", NEWTON CO., HARGER TGBI14420M, OR EQUIVALENT. HOLE CENTERS TO MATCH NEMA DOUBLE LUG CONFIGURATION.
2. INSULATORS. INSTRUMENT CO. CAT. NO. 3061-4 OR HARGER EQUIVALENT.
3. ⅝" LOCKWASHERS, NEWTON INSTRUMENT CO. CAT. NO. 3015-8 OR EQUIVALENT.
4. WALL MOUNTING BRACKET, NEWTON INSTRUMENT CO. CAT. NO. A-6056 OR HARGER EQUIVALENT.
5. ⅝" x 1" H.H.C.S. BOLTS, NEWTON INSTRUMENT CO. CAT. NO. 3012-1 OR HARGER EQUIVALENT.

TYPICAL GROUND BAR DETAIL (2)

SCALE: NTS

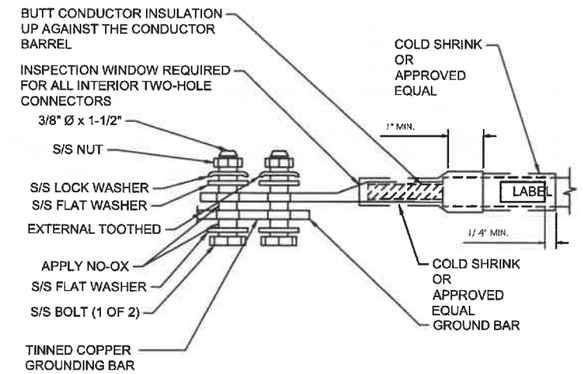

TYPICAL GROUND BAR CONNECTION DETAIL (3)

SCALE: NTS

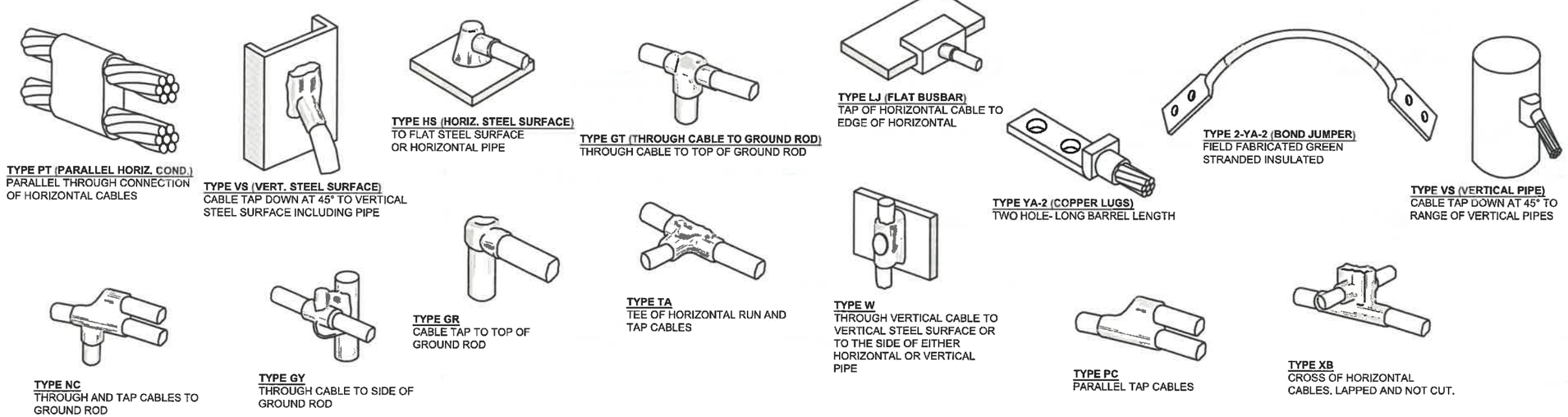

TYPICAL CADWELD TYPES DETAIL (4)

SCALE: NTS

at&t

smartlink
85 RANGEWAY ROAD - BLDG 3, SUITE 102
NORTH BILLERICA, MA 01862
SMARTLINKLLC.COM

RAMAKER & ASSOCIATES, INC.
100% EMPLOYEE-OWNED
855 Community Dr, Sauk City, WI 53583
608-643-4100 www.Ramaker.com
Sauk City, WI • Willmar, MN
Woodcliff Lake, NJ • Bayamon, PR

Certification & Seal:
I hereby certify that this plan, specification, or report was prepared by me or under my direct supervision and that I am a duly Licensed Professional Engineer under the laws of the State of Massachusetts.

COMMONWEALTH OF MASSACHUSETTS
JAMES R. SKOWRONSKI
CIVIL
No. 47833
REGISTERED PROFESSIONAL ENGINEER

Registered Civil Engineer Signature: Date: 11/13/2019

MARK	DATE	DESCRIPTION
2	11/13/19	FINAL CDs REVISED PER COMMENTS
1	11/06/19	FINAL CDs ISSUED
0	09/26/19	CDs ISSUED FOR REVIEW

ISSUE PHASE: FINAL — DATE ISSUED: 11/13/2019

PROJECT TITLE:
SOUTH TRURO
FA# 10014237
SITE# MAL01061

PROJECT INFORMATION:
5 TOWN DUMP ROAD
TRURO, MA 02666
BARNSTABLE COUNTY

SHEET TITLE:
GROUNDING DETAILS

SCALE: NONE

PROJECT NUMBER: 45315
SHEET NUMBER: G-1

This document contains confidential or proprietary information of Ramaker & Associates, Inc. Neither this document nor the information herein is to be reproduced, distributed, used or disclosed either in whole or in part except as authorized by Ramaker and Associates, Inc.

I:\45300\45315\CAD\45315_10014237_AE201_190916_MA1061_Rev0_3C-4C_Retrofit.dwg Printed by: amaurtua on Nov 13, 2019 - 12:27pm

© Copyright 2019 - Ramaker & Associates, Inc. - All Rights Reserved
DRAWN BY: BTL CHECKED BY: AJK

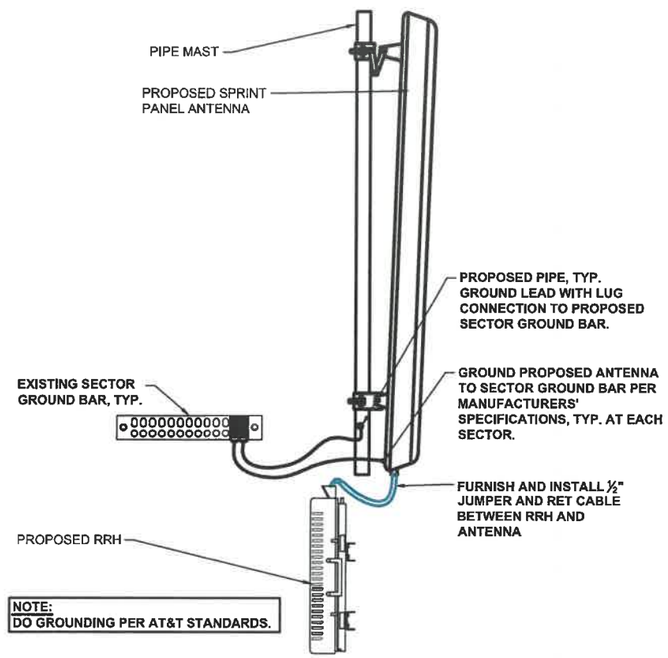

ANTENNA & RRU GROUNDING DETAIL (1)
SCALE: NTS

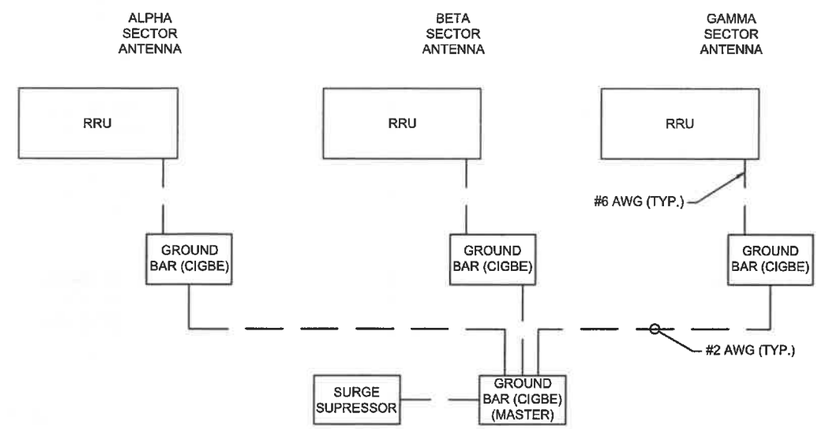

SCHEMATIC DIAGRAM GROUNDING SYSTEM (2)
SCALE: NTS

at&t

smartlink

85 RANGEWAY ROAD - BLDG 3, SUITE 102
NORTH BILLERICA, MA 01862
SMARTLINKLLC.COM

RAMAKER & ASSOCIATES, INC.
100% EMPLOYEE-OWNED
855 Community Dr, Sauk City, WI 53583
608-643-4100 www.Ramaker.com
Sauk City, WI • Willmar, MN
Woodcliff Lake, NJ • Bayamon, PR

Certification & Seal:
I hereby certify that this plan, specification, or report was prepared by me or under my direct supervision and that I am a duly Licensed Professional Engineer under the laws of the State of Massachusetts.

COMMONWEALTH OF MASSACHUSETTS
JAMES R. SKOWRONSKI
CIVIL
No. 47833
REGISTERED PROFESSIONAL ENGINEER

Registered Civil Engineer Signature: Date: 11/13/2019

MARK	DATE	DESCRIPTION
2	11/13/19	FINAL CDs REVISED PER COMMENTS
1	11/06/19	FINAL CDs ISSUED
0	09/26/19	CDs ISSUED FOR REVIEW

ISSUE PHASE: FINAL
DATE ISSUED: 11/13/2019

PROJECT TITLE:
SOUTH TRURO
FA# 10014237
SITE# MAL01061

PROJECT INFORMATION:
5 TOWN DUMP ROAD
TRURO, MA 02666
BARNSTABLE COUNTY

SHEET TITLE:
GROUNDING DETAILS

SCALE: NONE

PROJECT NUMBER: 45315
SHEET NUMBER: G-2

This document contains confidential or proprietary information of Ramaker & Associates, Inc. Neither this document nor the information herein is to be reproduced, distributed, used or disclosed either in whole or in part except as authorized by Ramaker and Associates, Inc.

I:\45300\45315\CAD\45315_10014237_AE201_190916_MA1061_Rev0_3C-4C_Retrofit.dwg Printed by: amaurtua on Nov 13, 2019 - 12:27pm