Truro Board of Selectmen Meeting

Tuesday, September 13, 2016

Regular Board of Selectmen Meeting - 5:00pm

Selectmen's Chambers Town Hall 24 Town Hall Road, Truro

1. PUBLIC COMMENT

A. Open the Regular Meeting

B. Public Comment Period - *The Commonwealth's Open Meeting Law limits any discussion by members of the Board of an issue raised to whether that issue should be placed on a future agenda*

2. PUBLIC HEARINGS

A. Fiscal Year 2017 Tax Classification Hearing and Review and Approve signatory authority to the Principal Assessor for the Classification Tax Allocation (LA-5)
Presenter: Cathy Fryxell, Principal Assessor

3. BOARD/COMMITTEE/COMMISSION APPOINTMENTS

A. Appointment of Angela Gaimari to the Cable & Internet Advisory Committee

B. Appointment of Angela Gaimari to the Truro Cultural Council

4. TABLED ITEMS

A. Event Notification Form and Letter for American Lung Association Annual Autumn Escape Bicycle Trek- 9/25 – MOVE FOR ACTION
Presenter: Rae Ann Palmer, Town Manager

5. BOARD OF SELECTMEN ACTION

A. Joint Meeting with Charter Review Committee for Discussion and Recommendations
Presenter: Phil Smith, Chair Charter Review Committee

B. Presentation on Herring River Restoration
Presenter: Tim Smith, Restoration Ecologist, Cape Cod National Seashore

C. Review and Approve Conservation Restrictions for 1 Skyview Drive-Friedman, 15 Cabral Farm Rd-Johnson (Truro Center for the Arts at Castle Hill), 15 North Pamet Rd-McArdle
Presenter: Fred Gaechter, Truro Conservation Trust

D. Discussion on Naming Walking Trail Located on Town Conservation Land at Edgewood Farm
Presenter: Fred Gaechter, Truro Conservation Trust

E. Review and Approve Board of Selectmen Policy for Residential Hiring Preference
Presenter: Rae Ann Palmer, Town Manager

F. Discussion of Solar Contract and Possible Alternatives
Presenter: Rae Ann Palmer, Town Manager

6. CONSENT AGENDA

A. Review/Approve and Authorize Signature:
   1. Contract for GFM Enterprises for Transfer Station Remediation Project Bid
   2. Wireless Communications Facilities Lease Agreement with Crown Castle (Consent for Generator Replacement-AT&T) for Cell Tower located at 344 Route 6
   3. Truro Police Department Lieutenant Contract

B. Declaration of Suicide Prevention Week

C. Reappointment of Board/Committee/Commission Member

D. Review and Approve Declaration of Surplus Items Department of Public Works Vehicles

E. Review and Approve Declaration of Surplus Items Police Department-Police Cruiser for Trade In

F. Permission for Town Manager to Declare Surplus Items

G. Review and Approve One Day Entertainment-Captain's Choice 4 Highland Rd., September 17th, 2016

H. Review and Approve Regular Board of Selectmen Minutes – August 8, 2016, August 9, 2016

7. SELECTMEN AND LIAISON AND TOWN MANAGER REPORTS

8. NEXT MEETING AGENDA: Tuesday, September 27

Agenda Item: 2A

TOWN OF TRURO

Board of Selectmen Agenda Item

DEPARTMENT: Assessors Department

REQUESTOR: Cathy Fryxell, Principal Assessor

REQUESTED MEETING DATE: September 13, 2016

ITEM: Tax Classification Hearing pursuant to MGL Ch. 40 S. 56

EXPLANATION:

Every year before the tax rate can be set; the Selectmen must conduct the classification hearing for the purpose of determining the percentages of the local tax levy to be borne in Fiscal Year and to vote on the tax rate options available to the municipality under property tax classification, MGL Chapter 40, Sec. 56. The hearing is held after the Board of Assessors has determined final values, classified all properties and reported this information for certification by the Department of Revenue. On June 27, 2016, the Department of Revenue certified Truro's Assessed Values for Fiscal Year 2017. The Board of Assessors herein provides the Selectmen with the information necessary to make these classification decisions.

Listed below are the FY2016 & 2017 levy totals by classification from the state report LA-5, allowing a visual of potential impact on the individual class. (The 2017 levy values are currently not certified as the recap process has not yet been completed.)

DOR Code	Municipality	Fiscal Year	Residential Levy	Open Space Levy	Commercial Levy	Industrial Levy	Personal Prop Levy	Total Tax Levy	Res/OS as a % of Total	CIP as a % of Total
300	Truro	2016	13,300,195	0	624,946	11,091	173,805	14,110,037	94.26	5.74
300	Truro	2017	13,962,845	0	662,511	11,717	184,009	14,821,081	94.21	5.79

1. <u>Classifying the tax rate</u>:
   - Classifying the tax rate means applying the same or different tax rates to different classes of property (residential, open space, commercial, industrial and personal property) according to procedures and formulas set by state statues. Truro does not

have any property that is classified by the DOR as Open Space.

- Voting a residential factor of "1" establishes that the same tax rate is applied to all classes of property at a single rate per thousand dollars of value.
- Voting a residential factor of ".9" would shift the burden from the residential and Open Space (by reducing their tax rate 10%) to the Commercial, Industrial & Personal Properties classes (by increasing their tax rate 10%).
- Though the tax rates would differ according to the property class, the total tax levy remains the same.
- At their meeting held on September 6, 2016, the Board of Assessors voted unanimously to recommend to vote a residential factor of "1".

2. <u>Open Space Discount:</u>
   - Truro does not have any properties classified as Open Space so it would have no effect if the Board of Selectmen should vote on an open space discount.
   - The Open Space properties are addressed through conservation restrictions or chapter land exemption.
   - At their meeting held on September 6, 2016, the Board of Assessors voted unanimously to recommend to vote not to grant an Open Space discount.

3. <u>Residential Exemption:</u>
   - The Residential Exemption grants an exemption of up to 35% (per the Governor's new Modernization Law) of the average residential property value for all year-round resident property owners.
   - Through the application procedure of the exemption to the year-round residents and the calculation of the new tax rate to recapture the lost levy, the exemption results in reduced taxes being paid by the year-round resident property owners, while shifting the tax burden to part-time resident property owners.
   - The Board of Assessors do not recommend granting the Residential Exemption as this results in shifting the tax levy share not between the different classes but between the residential class itself.
   - As part-time residents already pay a Personal Property tax on the contents of their Truro homes which year-round residents do not pay, and customarily place fewer demands on municipal services, the Board of Assessors feel it would be inequitable to create this separation within the Residential class.
   - At their meeting held on September 6, 2016, the Board of Assessors voted unanimously to recommend to vote not to grant a Residential Exemption which would shift the tax burden within the residential class from residents to non-residents.
   - Discovery continues as to determine if this is a viable future option for Truro.

4. <u>Small Commercial Exemption:</u>
   - This exemption would shift the tax burden within the Commercial and Industrial classes from the small Commercial and Industrial properties (under $1million valuation & less than 10 employees) to larger Commercial and Industrial properties in Town.
   - As Truro has a minimal Commercial/Industrial class, the Small Commercial exemption could cause hardship on some local businesses.
   - At their meeting held on September 6, 2016, the Board of Assessors voted unanimously to recommend to vote not to grant a Small Business Exemption which would shift the tax burden within the commercial, industrial and personal property classes from certain small commercial properties to other commercial and industrial properties.

5. <u>LA-5 Signature:</u>
   - As part of the annual Recapitulation Report (Recap) being certified by the Department of Revenue, the Assessor is required to inform the Board of Selectmen the amount of the current year excess levy capacity. The Board's signature on the LA-5 Gateway Report is required as proof of this notification at the conclusion of the Classification Hearing.
   - To expedite this step and avoid the need for each Selectman to come to the Assessor's Office and individually sign onto the Department of Revenues' Gateway form, please vote to authorize Cathy Fryxell, Principal Assessor, authorization to sign the LA-5 on behalf of the Selectmen.

IMPACT IF NOT APPROVED: The Fiscal Year Tax Recapitulation Report cannot be completed and the new Tax Rate cannot be set for the timely generation of the Real Estate Tax Bills.

SUGGESTED ACTIONS:

- On the matter of **classifying the tax rate**,
  Motion to approve a residential factor of "1".

- On the matter of an **open space discount**,
  Motion to not grant an Open Space discount.

- On the matter of a **residential exemption**,
  Motion to not grant a Residential exemption.

- On the matter of a **small commercial exemption**,
  Motion to not grant a Small Business exemption.

- On the matter of **signing the State Form LA-5**,
  Motion to authorize Cathy Fryxell, Principal Assessor, to sign the LA-5 on behalf of the Selectmen.

ATTACHMENTS:

1. Legal Notice
2. Recommendations from the Board of Assessors
3. State Tax Form LA-4 which indicates totals by class of the FY2017 certified parcel values
4. Authorization for Board Chairman signature on LA-5 report

Agenda Item: 2A1

LEGAL NOTICE
TOWN OF TRURO
PUBLIC NOTICE
TAX CLASSIFCATION HEARING

Notice is hereby given that the Truro Board of Selectmen will hold a public hearing on Tuesday, September 13, 2016 at 5:00 p.m. at the Truro Town Hall, 24 Town Hall Road, Truro, pursuant to MGL Ch. 40, Section 56, for the purpose of determining the percentages of the local tax levy to be borne in Fiscal Year 2017 by each class of property: residential, open space, commercial, industrial, and personal property. The Board of Assessors will present information and data relevant to making such determination, including the fiscal effect of the available alternatives. The public is encouraged to submit comments in writing to the Office of the Town Administrator/Board of Selectmen, PO Box 2030, Truro, MA 02666, or in person at the hearing.

Paul Wisotzky, Chairman
Board of Selectmen

Agenda Item: 2A2

TOWN OF TRURO

P.O. Box 2030, Truro, MA 02666
Tel: 508-349-7004, Extension: 10 or 24
Fax: 508-349-5505

At their September 6, 2016 meeting, the Board of Assessors voted unanimously to make the following recommendations to the Board of Selectmen for their Fiscal Year 2017 Classification Hearing to be held September 13, 2016 at 5:00 p.m.:

On the matter of classifying the tax rate:

- **To vote a residential factor of "1"** so that each class maintains 100% of its full value tax share and not shift the tax burden from the residential and open space property classes to the commercial, industrial and personal property classes.

On the matter of an open space discount:

- **Not to grant an open space discount** which would shift the tax burden from the open space property class to the residential property class.

On the matter of a residential exemption:

- **Not to grant a residential exemption** which would shift the tax burden within the residential class from residents to non-residents. However, discovery continues to determine if this is a viable option for Truro.

On the matter of a small commercial exemption:

- **Not to grant a small business exemption** which would shift the tax burden within the commercial, industrial and personal property classes from certain small, commercial properties to other commercial and industrial properties.

On the matter of notification of the excess levy capacity:

- Your signatures will be required on the State Tax Form LA-5 at the conclusion of the Classification Hearing. The signatures indicate the Selectmen have been informed of the amount of the excess levy capacity.To expedite this step and avoid the need for each Selectman to come to the Assessor's Office and individually sign onto the Department of Revenues' Gateway form, **please VOTE TO AUTHORIZE Cathy Fryxell, Principal Assessor, authorization to sign the LA-5 on behalf of the Selectmen.**

MASSACHUSETTS DEPARTMENT OF REVENUE
DIVISION OF LOCAL SERVICES
BUREAU OF LOCAL ASSESSMENT

Truro

City / Town / District

Agenda Item: 2A3

ASSESSMENT/CLASSIFICATION REPORT as of January 1, 2016

Fiscal Year 2017

Property Type	Parcel Count		Class1 Residential	Class2 Open Space	Class3 Commercial	Class4 Industrial	Class5 Pers Prop
101		2,078	1,557,730,000				
102		528	151,892,500				
MISC 103,109		137	121,758,200				
104		55	32,420,720				
105		4	2,281,300				
111-125		9	6,108,900				
130-32,106		485	118,615,400				
200-231		0		0			
300-393		82			81,280,900		
400-442		4				1,678,600	
450-452		0				0	
CH 61 LAND	0	0		0	0		
CH 61A LAND	6	6		0	26,380		
CH 61B LAND	0	0		0	0		
012-043		30	9,600,561	0	13,608,329	0	
501		2,133					12,129,260
502		51					3,267,430
503		0					0
504		1					8,944,740
505		2					1,407,000
506		0					0
508		4					613,840
550-552		0					0
TOTALS		***5,615***	***2,000,407,581***	***0***	***94,915,609***	***1,678,600***	***26,362,270***
Real and Personal Property Total Value							2,123,364,060
Exempt Parcel Count & Value						420	177,900,300

For CH 61, 61A and 61B Land: enter the mixed use parcel count in the left-hand box, and enter the 100% Chapter land parcel count in the right-hand box.

Signatures

Board of Assessors

Cathy Fryxell, Deputy Assessor , Truro , cfryxell@truro-ma.gov 508-349-7004 | 6/21/2016 1:27 PM

Comment: On behalf of the Board of Assessors

NOTE : The information was Approved on 6/30/2016

Agenda Item: 2A4

TOWN OF TRURO

P.O. Box 2030, Truro, MA 02666
Tel: 508-349-7004, Extension: 10 or 24
Fax: 508-349-5505

To:

From: Board of Selectmen

Date: September 13, 2016

RE: Authorization to sign electronically

At the Classification Hearing held this evening, September 13, 2016, the Board of Selectmen voted to grant Principal Assessor, Cathy Fryxell signing authority on the LA-5 form on our behalf. The minutes will be forwarded to you when completed.

Thank you,

Paul Wisotzky, Chairman
Board of Selectmen

TOWN OF TRURO

Board of Selectmen Agenda Item

DEPARTMENT: Administration

REQUESTOR: Noelle Scoullar, Executive Assistant

REQUESTED MEETING DATE: September 13, 2016

ITEM: Application to Serve

EXPLANATION: Angela Gaimari has applied to serve on the Cable & Internet Advisory Committee. There is an unexpired term which must be filled first which expires on June 30, 2017. Chair, Mary Abt has spoken with the applicant and has approved her being appointed to the Committee.

FINANCIAL SOURCE (IF APPLICABLE): N/A

IMPACT IF NOT APPROVED: The applicant will not be able to participate on the Cable & Internet Advisory Committee.

SUGGESTED ACTION: *MOTION TO appoint Angela Gaimari to the Cable & Internet Advisory Committee for an unexpired term which expires June 30, 2017.*

ATTACHMENTS:

1. Application to Serve
2. Approval email from Chair, Mary Abt

TOWN OF TRURO

P.O. Box 2030, Truro MA 02666
Tel: (508) 349-7004 Fax: (508) 349-5505

APPLICATION TO SERVE ON AN APPOINTED MULTI-MEMBER BODY

NAME: Angela Gaimari HOME TELEPHONE: [redacted]

ADDRESS: 3 Quail Run WORK PHONE :

MAILING ADDRESS: PO Box 109 E-MAIL: [redacted]

FAX: MULTI-MEMBER BODY ON WHICH I WISH TO SERVE:

Cable & Internet Commitee; [redacted]

SPECIAL QUALIFICATIONS OR INTEREST: Social media, marketing, running a small business, consulting

COMMENTS:

SIGNATURE: DATE: 8-9-16

****

COMMENT/RECOMENDATION OF CHAIRPERSON OF MULTI-MEMBER BODY (OPTIONAL)

SIGNATURE: DATE:

INTERVIEW DATE: APPOINTMENT DATE (IF APPLICABLE):

Noelle Scoullar

From: [redacted]
Sent: Wednesday, August 10, 2016 11:12 AM
To: Noelle Scoullar
Subject: Re: Application to Serve

Spoke to Angela. Sounds good. You have my approval to move forward with selectman approval Mary
----- Original Message -----
From: Noelle Scoullar <nscoullar@truro-ma.gov>
To: Mary Abt [redacted]
Cc: Nicole Tudor <ntudor@truro-ma.gov>
Sent: Tue, 09 Aug 2016 17:07:50 -0000 (UTC)
Subject: Application to Serve

Hi Mary!

We received an application from a woman who would like to be on the Cable and Internet Advisory Committee. I realize that it's just you at this time, and I have advised this person that I am not sure what will take place with only two members, and she is still interested. Would you please email us your approval and we will place Angela on a Board of Selectmen agenda.

Thank you!
Noelle

TOWN OF TRURO

Board of Selectmen Agenda Item

DEPARTMENT: Administration

REQUESTOR: Noelle Scoullar, Executive Assistant

REQUESTED MEETING DATE: September 13, 2016

ITEM: Application to Serve

EXPLANATION: Angela Gaimari has applied to serve on the Truro Cultural Council. Chair, Kenneth Hawkey has spoken with the applicant and has approved her being appointed to the Committee.

FINANCIAL SOURCE (IF APPLICABLE): N/A

IMPACT IF NOT APPROVED: The applicant will not be able to participate on the Truro Cultural Council.

SUGGESTED ACTION: *MOTION TO appoint Angela Gaimari to the Truro Cultural Council for a term which expires June 30, 2019.*

ATTACHMENTS:

1. Application to Serve
2. Approval email from Chair, Kenneth Hawkey

TOWN OF TRURO

P.O. Box 2030, Truro MA 02666
Tel: (508) 349-7004 Fax: (508) 349-5505

RECEIVED
SELECTMENS OFFICE
AUG 0 9 2016
TOWN OF TRURO
MASSACHUSETTS

APPLICATION TO SERVE ON AN APPOINTED MULTI-MEMBER BODY

NAME: Angela Gaimari HOME TELEPHONE: [redacted]

ADDRESS: 3 Quail Run WORK PHONE :

MAILING ADDRESS: PO Box 109 E-MAIL: [redacted]

FAX: MULTI-MEMBER BODY ON WHICH I WISH TO SERVE:

[redacted] Cultural Council

SPECIAL QUALIFICATIONS OR INTEREST: Social media, marketing, running a small business, consulting

COMMENTS:

SIGNATURE: DATE: 8-9-16

****

COMMENT/RECOMENDATION OF CHAIRPERSON OF MULTI-MEMBER BODY (OPTIONAL)

SIGNATURE: DATE:

INTERVIEW DATE: APPOINTMENT DATE (IF APPLICABLE):

Noelle Scoullar

From: [redacted]
Sent: Monday, August 15, 2016 6:39 PM
To: Maureen Burgess; Noelle Scoullar
Cc: Nicole Tudor
Subject: Re: Application to Serve

I have had correspondence with Angela Gaimari and I happily approve her application to join the Truro Cultural Council Board.

Kenneth Hawkey

Chair, Truro Cultural Council

Subject: Application to Serve

Hello Ken,

Angela Gaimari has filled out an application to serve on the Cultural Council. Would you please send us your approval via email and we will place this on a Board of Selectmen agenda for appointment.

Thank you!
Noelle

TOWN OF TRURO

Board of Selectmen Agenda Item

DEPARTMENT: Administration

REQUESTOR: Noelle Scoullar, Executive Assistant

REQUESTED MEETING DATE: August 8, 2016

ITEM: American Lung Association 2016 Autumn Escape Bike Trek (TABLED)

EXPLANATION: The approval of the state notification for the 32nd Annual Bike Trek for the American Lung Association bike/road race was tabled at your August 9th meeting due to unanswered questions raised by Board members. Safety concerns were raised about the route along Old County Road onto Depot Road and questions about whether or not this was a new event. A review of Town records indicates that this is not a new event and that it has historically used Old County to Depot Road. There have been no known issues with this route in prior years. The bike trek is to take place Friday, September 23rd through Sunday, September 25th, 2016 with the Truro portion happening on Sunday, September 25th. Mr. Paul Curley, on behalf of the event, has requested permission for this year due to the fast approaching date of the event. He has promised to work with the Town next year to incorporate the Town's concerns into the route. The event planner's biggest concern is safety for riders crossing Route 6; by coming down Old County to Depot, riders are able to get across Route 6 at the Pamet Roads on/off ramp.

Procedurally, the Chair of the Board of Selectman must sign the attached notification to the State. The permit could be then signed by the Town Manager.

IMPACT IF NOT APPROVED: The 2016 Autumn Escape Bike Trek participants will not be given permission to come through Truro.

SUGGESTED ACTION: *MOTION TO approve the American Lung Association's 2016 Autumn Escape Bike Trek and authorize the Chair to sign.*

ATTACHMENTS:

1. Event Notification Form
2. Letter from Paul Curley
3. Bike trek route
4. Application for Permit
5. 2nd Letter from Paul Curley/Certificate of Liability Insurance

EVENT NOTIFICATION FORM

Date: 7/8/16

Ms. Mary-Joe Perry
District Highway Director, District Five
MassDOT, Highway Division
1000 County Street
Taunton, MA 02780

Dear Sir:

Please be advised that the City/Town of Truro has notified the Board of Selectmen/City Council, Local Police Department, Local Fire Department and if applicable the State Police of its intention to conduct **road work/parade/race**/or other events impacting State Highways on Route(s) ____ (route notes included) in or through the City/Town(s) of Truro on Sunday Sept., 25 from 9 to 10:30am _____ benefiting American Lung Association of the Northeast

The Board of Selectmen/City Council understands that it must give the Police and Fire Departments at least 48 hours notice before the commencement of the proposed work or event.

The Grantee must supply a Traffic Management Plan when the roadway is occupied and for all detours associated with said events to this Department and to all officials listed below. The Grantee(s) must notify the local and/or state police to set up a detour of this area with appropriate signs and barricades. The local Fire Department must be notified of the detour to ensure that measures will be taken to minimize disruption to the Fire Department's emergency service during the event. The Grantee(s) must also notify local media (newspapers, radio) of this proposed event.

The following signatures are required prior to the issuance of the Permit. All officials listed below shall assume all responsibility and liability for all activity associated under their jurisdiction.

LOCAL POLICE DEPARTMENT

Signed: Kyle Takakjian

Title: Police Chief

City/Town: TRURO

FIRE DEPARTMENT

Signed: [illegible]

Title: Fire Chief

City/Town: Truro

BOARD OF SELECTMEN/CITY COUNCIL

Signed: _____

Title: _____

City/Town: _____

STATE POLICE DEPARTMENT

Signed: _____

Title: _____

City/Town: _____

AMERICAN LUNG ASSOCIATION®
OF THE NORTHEAST

Connecticut
45 Ash Street
East Hartford, CT 06108

Maine
122 State Street
Augusta, ME 04330

Massachusetts
14 Beacon Street
Boston, MA 02108

1661 Worcester Road,
Suite 301
Framingham, MA 01701

393 Maple Street
Springfield, MA 01105

New Hampshire
Cloudport
51 Islington Street, Unit 1
Portsmouth, NH 03801

New York
418 Broadway, 2nd Floor
Albany, NY 12207

700 Veterans Memorial
Highway, Suite 305
Hauppauge, NY 11788

21 West 38th Street,
3rd Floor
New York, NY 10018

1595 Elmwood Avenue
Rochester, NY 14620

355 Harlem Road,
Building C, 2nd Floor
West Seneca, NY 14224

237 Mamaroneck Avenue,
Suite 205
White Plains, NY 10605

Rhode Island
260 West Exchange Street,
Suite 102B
Providence, RI 02903

Vermont
372 Hurricane Lane,
Suite 101
Williston, VT 05495

RECEIVED
SELECTMENS OFFICE
JUL 07 2016
TOWN OF TRURO
MASSACHUSETTS

June 28, 2016

Paul Wisotzky
Truro Board of Selectmen
P.O. Box 2030
Truro, MA 02666

Dear Mr. Wisotzky,

The American Lung Association's 2016 Autumn Escape Bike Trek is set to take place **Friday, September 23, through Sunday, September 25, 2016**. The Autumn Escape Bike Trek, now in its 32nd year, is a three-day event to raise funds to help further our mission *to save lives by improving lung health and preventing lung disease*.

A maximum of 300 bicyclists will take part in the **Autumn Escape Bike Trek**. Riders participate at their own speed. All of the cyclists must wear ANSI approved helmets and are instructed to ride safely and follow all traffic laws and regulations. The **AEBT** will have both medical and mechanical support. We strive to limit our use of main roads when possible. Enclosed you will find a copy of our proposed route through your city/town.

I am contacting the Police Department and the Board of Selectmen/Town Manager for approval and recognition to pass through your town. Please sign this letter acknowledging your awareness of our event and return it the enclosed envelope no later than **July 29, 2016**. Your signature is necessary to obtain the appropriate State Highway Permits.

You can reach me with any questions or concerns at (781) 314-9000. Thank you for your continued support throughout the years.

More information is available on the **Annual Autumn Escape Bike Trek** at www.biketreknewengland.org.

Sincerely,

Paul Curley
Route Manager

Authorized Signature

Please Print Name/Title Date

Go (Mile)	To (Mile)	Signs	Direction	Location (roads of travel in Bold)	Landmarks	Fastest	Slowest
Truro							
1	24.8		straight	on **Old County Road**	Prince Valley Rd on right	9:12	10:24
1.8	26.6		bear right	onto **Depot Road**			
0.5	27.1		straight	onto **Pamet Road**	slight jog, under Rt 6		
0.1	27.2		left	onto **N. Pamet Road**			
0.1	27.3	**SIGN**	left	onto **Ramp to Rt 6 East**	dirt road group goes straight		
0.1	27.4	ss	bear right	onto **Rt 6 East**	Caution heavy traffic		
2.5	29.9		right	onto **South Highland Rd**	sign for camping		
1	30.9		straight	on **South Highland Rd**	Horton's Campground on right		
0.2	31.1		straight	on **South Highland Rd**	entrance to museum on right		
0.1	31.2	**SIGN**	left	onto **Highland Rd**			
0.8	32	**SIGN**	left	onto **Ramp to Rt 6 East**			
0.1	32.1		bear right	onto **Rt 6 East**	Caution heavy traffic		
0.4	32.5	**SIGN**	right	onto **Head of Meadow Road**			
0.9	33.4		straight	**into Rest Stop #3, Beach Parking Lot**		9:33	11:18
				100 Head of the Meadow Rd., Truro, MA 02657			
0	33.4		exit	onto **Head of the Meadow Bike Trail**	narrow and bumpy in places		
1.9	35.3		left	onto **High Head Road**	dirt road		
0.3	35.6		bear right	on **High Head Road**	becomes paved		
0.3	35.9	ss	right	onto **Rt 6 East**	Caution heavy traffic		
1.7	37.6		straight	on **Rt 6 East**	town line	9:48	11:42
P-town							
2	39.6	lights	straight	on **Rt 6 East**	at Conwell/Race Point Road	9:54	11:54
0.5	40.1	BL - **S**	left	onto **Shank Painter Rd**			
0.1	40.2		left	onto **Jerome Smith Rd**	cemetery on left		
0.1	40.3		right	onto **Winslow St**	cemetery on left		
0.3	40.6		right	**into Community Center**	Finish Day 3	10:00	12:00
				8 Winslow St., Provincetown, MA 02657			

TOWN OF TRURO

P.O. Box 2030, Truro, MA 02666
Tel: 508-349-7004 , Extension: 10 or 24 Fax: 508-349-5505

APPLICATION FOR PERMIT FOR ORGANIZED BIKE & ROAD RACES

Applicant: Paul Curley **Email:** biketrek@lungne.org

Group Affiliation (If Any): American Lung Association

Mailing Address: 260 W. Exchange St., Ste 102B **City:** Providence **State:** RI **Zip:** 02903

Phone: 781 314 9004 **Cell Phone:** [redacted]

Type of Event (Please be **specific** as to number of persons, equipment to be used (if any), whether food or beverages will be served, parking arrangements, etc.)**:**
32nd Annual Autumn Escape Bicycle Trek, 300 riders, no food served and no parking needed

Streets &/or Roads to be Used:
route notes included

Date(s) and Hours Race/Event:
Sept., 25th 2016, 9 am to 10:30 am **Day:** Sunday

Applicant is responsible for obtaining all necessary permits and inspections (see page 2)
If Town Beaches are being used the Use of Town Property MUST be completed in addition to this application.
I, as applicant for the above, do hereby acknowledge that the town is exempt from any liability for this activity. I, as applicant for the above, additionally guarantee that the area to be used will be cleaned and left free of any debris at the completion of said activity.

Signature of Applicant 7/8/2016
Date

Action by the Town Administrator : Date: _____

_____ Approved as submitted

_____ Approved with the following condition(s): _____

_____ Disapproved with the following reason(s): _____

Signature of the Town Administrator : _____

APPLICANT IS RESPONSIBLE FOR OBTAINING ALL NECESSARY PERMITS & INSPECTIONS

Health/Conservation Agent Signature: Comments/Conditions: Permits/Inspections needed:	**Building Commissioner Signature:** Comments/Conditions: Permits/Inspections needed:
Police Department Signature: Kyle Takalgian Comments/Conditions:	**Fire Department Signature:** Timothy Collins Comments/Conditions:
DPW Signature: Comments/Conditions:	**Harbormaster Signature:** Comments/Conditions:
Recreation and Beach Director: Comments/Conditions:	**Other:** Comments/Conditions:

Noelle Scoullar

From: Paul Curley <Paul.Curley@lung.org>
Sent: Wednesday, August 24, 2016 9:30 AM
To: Noelle Scoullar; Nicole Tudor
Subject: Re: Truro- American Lung Autumn Escape Bike Trek
Attachments: 16 AEBT Tru COI.pdf

Hi Nicole,

Please see below the letter that I have prepared. I have also sent along (attached) a certificate of insurance (some of the other towns we pass through need this). I am also prepared to attend the town meeting on Sept. 13th if you think that would help our cause.

Many thanks for all your help with this over the past years,

32nd Annual Autumn Escape Bike Trek to benefit the American Lung Association

This is my 12th year as Route Manager for the event and most of our route has remained the same through the 16 towns form Plymouth to Provincetown since I started. We work with the towns along the way to keep the journey as safe as possible. I understand there is concern about our use of Depot Rd which we use for one-half mile to connect Old County to Pamet Rd. The main reason for using Depot is that it brings use out to Route 6 where we can safely pass under it. We are open to the use of what ever route the town feels would be best. The current plan is for the riders to leave Cape Cod Sea Camps in Brewster at 8 am and passing through Truro between 9 and 10:30 am. We could encourage our group to start earlier if that would help with traffic. I know we are now running out of time and I would ask that we keep our current route as is for 2016 and I will get an early start in 2017 to make what ever changes the town would like for next year.

Paul Curley |
Sporting Event Manager
American Lung Association of the Northeast

Framingham, MA | Boston, MA| Providence, RI

Direct: 1-781-314-9002 | Paul.Curley@Lung.org | www.Lung.org

Toll-free: 1
-
800
-
499
-
5864 ext 9002

OP ID: ML

CERTIFICATE OF LIABILITY INSURANCE

DATE (MM/DD/YYYY) 08/17/2016

THIS CERTIFICATE IS ISSUED AS A MATTER OF INFORMATION ONLY AND CONFERS NO RIGHTS UPON THE CERTIFICATE HOLDER. THIS CERTIFICATE DOES NOT AFFIRMATIVELY OR NEGATIVELY AMEND, EXTEND OR ALTER THE COVERAGE AFFORDED BY THE POLICIES BELOW. THIS CERTIFICATE OF INSURANCE DOES NOT CONSTITUTE A CONTRACT BETWEEN THE ISSUING INSURER(S), AUTHORIZED REPRESENTATIVE OR PRODUCER, AND THE CERTIFICATE HOLDER.

IMPORTANT: If the certificate holder is an ADDITIONAL INSURED, the policy(ies) must be endorsed. If SUBROGATION IS WAIVED, subject to the terms and conditions of the policy, certain policies may require an endorsement. A statement on this certificate does not confer rights to the certificate holder in lieu of such endorsement(s).

PRODUCER
SCS Agency, Inc.
1981 Marcus Avenue, Suite 125
Lake Success, NY 11042

RECEIVED
SELECTMENS OFFICE
AUG 2 4 2016
TOWN OF TRURO
MASSACHUSETTS

CONTACT NAME: SCS Agency, Inc.
PHONE (A/C, No, Ext): 516-466-6007 FAX (A/C, No): 516-829-5857
E-MAIL ADDRESS: pluftig@scsai.com
PRODUCER CUSTOMER ID #: ALAO-73

INSURED
American Lung Association of the Northeast
45 Ash St.
East Hartford, CT 06108

INSURER(S) AFFORDING COVERAGE	NAIC #
INSURER A : Philadelphia Insurance Co.	18058
INSURER B : Hartford Fire Insurance Co.	19682
INSURER C :	
INSURER D :	
INSURER E :	
INSURER F :	

COVERAGES CERTIFICATE NUMBER: REVISION NUMBER:

THIS IS TO CERTIFY THAT THE POLICIES OF INSURANCE LISTED BELOW HAVE BEEN ISSUED TO THE INSURED NAMED ABOVE FOR THE POLICY PERIOD INDICATED. NOTWITHSTANDING ANY REQUIREMENT, TERM OR CONDITION OF ANY CONTRACT OR OTHER DOCUMENT WITH RESPECT TO WHICH THIS CERTIFICATE MAY BE ISSUED OR MAY PERTAIN, THE INSURANCE AFFORDED BY THE POLICIES DESCRIBED HEREIN IS SUBJECT TO ALL THE TERMS, EXCLUSIONS AND CONDITIONS OF SUCH POLICIES. LIMITS SHOWN MAY HAVE BEEN REDUCED BY PAID CLAIMS.

INSR LTR	TYPE OF INSURANCE	ADDL INSR	SUBR WVD	POLICY NUMBER	POLICY EFF (MM/DD/YYYY)	POLICY EXP (MM/DD/YYYY)	LIMITS	
A	GENERAL LIABILITY X COMMERCIAL GENERAL LIABILITY CLAIMS-MADE X OCCUR X Sex Abuse-1000000 GEN'L AGGREGATE LIMIT APPLIES PER: X POLICY PRO-JECT LOC	X		[redacted]	07/01/2016	07/01/2017	EACH OCCURRENCE DAMAGE TO RENTED PREMISES (Ea occurrence) MED EXP (Any one person) PERSONAL & ADV INJURY GENERAL AGGREGATE PRODUCTS - COMP/OP AGG	$ 1,000,000 $ 1,000,000 $ 10,000 $ 1,000,000 $ 3,000,000 $ 3,000,000 $
A	AUTOMOBILE LIABILITY ANY AUTO ALL OWNED AUTOS SCHEDULED AUTOS X HIRED AUTOS X NON-OWNED AUTOS			[redacted]	07/01/2016	07/01/2017	COMBINED SINGLE LIMIT (Ea accident) BODILY INJURY (Per person) BODILY INJURY (Per accident) PROPERTY DAMAGE (PER ACCIDENT)	$ 1,000,000 $ $ $ $ $
A	X UMBRELLA LIAB X OCCUR EXCESS LIAB CLAIMS-MADE DEDUCTIBLE X RETENTION $ 10,000			[redacted]	07/10/2016	07/10/2017	EACH OCCURRENCE AGGREGATE	$ 10,000,000 $ 10,000,000 $ $
B	WORKERS COMPENSATION AND EMPLOYERS' LIABILITY ANY PROPRIETOR/PARTNER/EXECUTIVE OFFICER/MEMBER EXCLUDED? Y / N (Mandatory in NH) If yes, describe under DESCRIPTION OF OPERATIONS below	N / A		[redacted]	07/01/2016	07/01/2017	X WC STATU-TORY LIMITS OTH-ER E.L. EACH ACCIDENT E.L. DISEASE - EA EMPLOYEE E.L. DISEASE - POLICY LIMIT	 $ 1,000,000 $ 1,000,000 $ 1,000,000

DESCRIPTION OF OPERATIONS / LOCATIONS / VEHICLES (Attach ACORD 101, Additional Remarks Schedule, if more space is required)
Subject to the policy terms & conditions
Event: Autumn Escape Bike Trek Plymouth to Provincetown MA September 23 - 25, 2016
Certificate holder is included as additional insured as per written contract

CERTIFICATE HOLDER

TOWNOFT

Town of Truro
24 Town Hall Road
Truro, MA 02666

CANCELLATION

SHOULD ANY OF THE ABOVE DESCRIBED POLICIES BE CANCELLED BEFORE THE EXPIRATION DATE THEREOF, NOTICE WILL BE DELIVERED IN ACCORDANCE WITH THE POLICY PROVISIONS.

AUTHORIZED REPRESENTATIVE

© 1988-2009 ACORD CORPORATION. All rights reserved.

The ACORD name and logo are registered marks of ACORD

Agenda Item: 5A

TOWN OF TRURO

Board of Selectmen Agenda Item

DEPARTMENT: Charter Review Committee

REQUESTOR: Phil Smith, Charter Review Committee

REQUESTED MEETING DATE: September 13, 2016

ITEM: Joint Meeting Discussion with Charter Review Committee

EXPLANATION: The Charter Review Committee members will attend a meeting with the Board of Selectmen for an open discussion on possible recommendations for Annual Town Meeting 2017.

SUGGESTED ACTION: *None Required, Discussion Only*

ATTACHMENTS: None

Agenda Item: 5B

TOWN OF TRURO

Board of Selectmen Agenda Item

DEPARTMENT: Administration

REQUESTOR: Rae Ann Palmer, Town Manager

REQUESTED MEETING DATE: September 13, 2016

ITEM: Presentation on Herring River Restoration with Tim Smith, of the Cape Cod National Seashore and Authorization for the Chair to Sign the MOU III

EXPLANATION: Board members requested an update on the Herring River project, therefore, Tim Smith of the National Seashore will be present to provide the update and answer questions.

In addition, the final Memorandum of Understanding, MOU III, is ready for signature. It was reviewed by Attorney Veara and Wellfleet's counsel. The Herring River Committee expects to have a signing ceremony at some point in the fall, so I am requesting that you authorize the Chair to sign the document now in anticipation of the signing ceremony. The MOU III is attached for your information.

IMPACT IF NOT APPROVED: Truro will not sign the memorandum of understanding.

SUGGESTED ACTION: *MOTION TO authorize the Chair to sign the Herring River Restoration MOU III.*

ATTACHMENTS:

1. Herring River Restoration MOU III

Final Memorandum of Understanding (MOU III)
Herring River Restoration Project
September 1, 2016

The following is a list of acronyms used herein:

CCNS: Cape Cod National Seashore
CNR: Chequessett Neck Road
CRP: Conceptual Restoration Plan
DRP: Detailed Restoration Plan
FEIS/EIR: Final Environmental Impact Statement/Report
HREC: Herring River Executive Council
HRRC: Herring River Restoration Committee
MEPA: Massachusetts Environmental Policy Act
MOU: Memorandum of Understanding
NEPA: National Environmental Policy Act
NPS: National Park Service

This Memorandum of Understanding (MOU) is effective upon signature by and among the National Park Service (NPS), a bureau of the United States Department of the Interior, acting through the Superintendent of the Cape Cod National Seashore (CCNS), and the Towns of Wellfleet and Truro, municipal corporations located in Barnstable County, Massachusetts, acting through their Boards of Selectmen. The purpose of this MOU is:

1) To ratify the Detailed Restoration Plan (DRP) set forth in the Final Environmental Impact Statement/Report (FEIS/EIR) for the restoration of the Herring River estuary, completed by the Herring River Restoration Committee (HRRC) pursuant to a previous (November 2007) Memorandum of Understanding (referred to as MOU II) between NPS and the Towns of Wellfleet and Truro;

2) To enable additional planning, engineering, funding, construction and implementation of the agreed-upon restoration plan, using an Adaptive Management Plan, as set forth in the FEIS/EIR.

3) To set forth the structure and responsibilities of an intergovernmental team to direct the Restoration Project.

4) To generally describe the responsibilities of an independent organization which the parties could engage to undertake specified activities in the restoration process.

WITNESSETH

WHEREAS, the National Park Service (hereinafter NPS) administers and manages the Cape Cod National Seashore (hereinafter CCNS), located partially within the Towns of Wellfleet and Truro (hereinafter "the Towns") and including more than 800 acres within

the Herring River floodplain; and whereas CCNS is legally authorized by U.S.C. Sections 1-3, 459b-459b-8 as a unit of the National Park System to enter into memoranda of understanding, and;

WHEREAS, the Town of Wellfleet maintains ownership of the Chequessett Neck Road (CNR) Dike, which currently controls tidal flow to the Herring River system, and the Town includes lands and waters within the Herring River estuary that may be affected by the restoration of tidal flow through the Dike, and;

WHEREAS, the Town of Truro includes lands and waters within the Herring River estuary that may be affected by the restoration of tidal flow through the Chequessett Neck Road Dike, and;

WHEREAS, High Toss Road, which crosses the Herring River floodplain, is located within Cape Cod National Seashore and is on land owned by the National Park Service, while the Town of Wellfleet holds rights for public access across it and maintains the road, and;

WHEREAS, the Town of Wellfleet and CCNS, pursuant to a (August 2005) MOU (referred to as MOU I) worked together to determine that restoration of the natural functions to the Herring River estuary is feasible and desirable, and to complete a Conceptual Restoration Plan (CRP), which was accepted by both the Towns of Wellfleet and Truro and CCNS pursuant to a second MOU (MOU II) executed in November 2007, and;

WHEREAS, pursuant to MOU II, the Towns and CCNS agreed that it was imperative that a Detailed Restoration Plan (DRP) be developed with continued public involvement and, when completed, the DRP represent the full consensus of the three primary entities; and whereas, the Towns and the CCNS agreed that alternatives analysis and public involvement approaches of the Massachusetts Environmental Policy Act (MEPA) and the National Environmental Policy Act (NEPA) would provide a mechanism for accomplishing these objectives, and;

WHEREAS, pursuant to MOU II, the Towns and the CCNS organized an interdisciplinary team, the Herring River Restoration Committee (hereinafter HRRC) to develop a detailed and comprehensive plan for restoration of the estuary and directed the Committee to:

a. Review the Herring River Conceptual Restoration Plan (CRP) accepted under MOU II.
b. Review all scientific and engineering reports in support of the CRP;
c. Develop a Detailed Restoration Plan (DRP) that addresses environmental and social concerns through an integrated MEPA/NEPA process of alternatives analysis and public involvement;
d. Develop a Detailed Restoration Plan that is suitable for local, state and federal permitting requirements of procedures;

e. Seek funding sources;
f. Inform the public on a regular basis through public meetings, reports or other forms of outreach, in addition to the public process required by MEPA and NEPA;
g. Produce a third MOU for the Towns' and CCNS's approval, agreeing to collaborate on project implementation per the Detailed Restoration Plan;
h. Deliver products of the MEPA/NEPA process, and;

WHEREAS, the HRRC has developed a DRP that addresses environmental and social concerns through an integrated MEPA/NEPA process of alternatives analysis and public involvement procedures as set forth in the Final Environmental Impact Statement/Report, and;

WHEREAS, the parties have determined that it is in the public interest to enter into this Memorandum of Understanding setting forth a cooperative arrangement between the parties for the next phase of the Herring River Restoration Project including additional planning, engineering, funding, construction and implementation of the agreed-upon Detailed Restoration Plan, using an Adaptive Management Plan, as set forth in the FEIS/EIR, this phase to be known as the implementation phase, and;

WHEREAS, the implementation phase will continue for many years, but at some point in time management responsibilities for tidal control infrastructure will be greatly reduced, this phase to be known as the long-range phase;

NOW THEREFORE, in consideration of the foregoing, the Towns and the CCNS agree as follows:

1. The Town of Wellfleet, the Town of Truro and CCNS hereby accept the Detailed Restoration Plan, including the Preferred Alternative D as set forth in the Final Environmental Impact Statement/Report, attached to this MOU. Implementation of the Detailed Restoration Plan (including but not limited to operation of proposed tide gates at Chequessett Neck Road, Mill Creek and Pole Dike Road) shall be in compliance with federal, state, regional and local permits and the provisions of an approved Herring River Adaptive Management Plan.

2. The Town of Wellfleet, the Town of Truro and CCNS agree to cooperate on implementation of the Detailed Restoration Plan, as set forth below. Representatives of the Town of Wellfleet, the Town of Truro and CCNS will form an intergovernmental team to direct the Restoration Project consisting of the following elements:

a. The Towns and Cape Cod National Seashore shall form a Herring River Executive Council (HREC) to: coordinate project implementation activities; serve as a forum for establishing and providing policy direction; review and approve the Adaptive Management Plan; monitor progress; and ensure compliance with laws, policies and regulations of member towns and the CCNS, project permits and

agreements and other applicable legal regulations. The HREC shall meet quarterly or as needed and shall consist of seven members as follows:

1) Two members of the Wellfleet Board of Selectmen and the Town Administrator;
2) Two members of the Truro Board of Selectmen and the Town Administrator;
3) The Superintendent of Cape Cod National Seashore or his/her designee(s).

The HREC shall operate by consensus decision-making (agreement among the two towns and CCNS), recognizing that the towns and Cape Cod National Seashore all have obligations to their own established laws, policies and regulations. In the event that there is dissent among the representatives of one of the towns, they shall determine among themselves the town's position. The HREC shall operate in Open Meetings according to MGL Chapter 30A.

b. The Herring River Restoration Committee (HRRC) established in MOU II as an interdisciplinary management team shall continue to exist and shall serve as an advisory group to the HREC, with representation from the Towns of Wellfleet and Truro, the Cape Cod National Seashore, Commonwealth of MA Division of Ecological Restoration (DER), U.S. Fish and Wildlife Service (USFWS), U.S. Natural Resources Conservation Service (NRCS) and the National Oceanic and Atmospheric Administration (NOAA). The HRRC will:

   1) Make project management and funding recommendations to the Herring River Executive Council (HREC);
   2) Direct and oversee approved elements of the Restoration Project, as set forth in the FEIS/EIR and Restoration Project permits;
   3) Provide planning, engineering, technical, operational and scientific coordination for the Project.

c. The HREC and the HRRC will work with any regulatory oversight group as may be established through federal, state and regional permitting processes.

d. The HREC may consult other individuals or organizations, as needed, such as stakeholder groups and/or science advisors.

e. Any decision to modify or alter tide gate openings at Chequessett Neck Road, Mill Creek and/or Pole Dike Road shall be made by the HREC, only after receiving a recommendation from the HRRC. Such decisions must be in compliance with federal, state, regional and local permits and the provisions of an approved Herring River Adaptive Management Plan.

3. Through separate contracts for services and/or Cooperative Agreements, the Towns and/or the CCNS may engage the services of an independent organization to undertake some or all of the responsibilities and functions outlined below, in coordination with HRRC:

a. Provide and manage professional level technical and administrative staff necessary for the completion of all project elements;

b. Compete for, receive, and administer available project funding from state, federal, and private sector sources;

c. Prepare and submit permit applications, ensure compliance with all permit conditions, noticing requirements, and other environmental compliance obligations;

d. Prepare and advertise bid solicitation packages, manage and oversee competitive bidding processes, select and manage contractors, oversee construction activities, pay invoices, and comply with funder and contractor stipulations subject to the provisions of MGL Chapters 30, 30B and 149, if applicable;

e. Facilitate agreements with affected landowners;

f. Conduct operations and maintenance of public infrastructure in cooperation with the towns and CCNS as stipulated in any contract agreement(s);

g. Implement the adaptive management plan under the technical direction of HRRC;

h. Perform public outreach and education activities.

4. The Town of Wellfleet, the Town of Truro and CCNS generally agree that the owners of the underlying land should own the components of the new project infrastructure during the implementation phase and for the long-term, as follows[1]:

a. Chequessett Neck Road (CNR) Bridge: *The Town of Wellfleet should continue to own the CNR dike/bridge.*

b. Chequessett Neck Road Tide Gates*: The Town of Wellfleet should own the new CNR tide gates.*

c. Mill Creek Dike: *CCNS should own the new Mill Creek dike.*

d. Mill Creek Tide Gates: *CCNS should own the new Mill Creek tide gates.*

e. High Toss Road: *High Toss Road is within the NPS boundary and located on land under federal ownership, with the Town of Wellfleet holding rights for public access. In order to facilitate tidal flow, the parties agree that the portion of High Toss Road bounded on the west by its intersection with Duck Harbor Road and bounded on the east by its intersection with Rainbow Lane (a distance of approximately 1000') should be removed. Maintenance of this portion of High Toss Road was discontinued by a vote of the Wellfleet Board of Selectmen on July 12, 2016.*

f. Pole Dike Road: *The Town of Wellfleet should continue to own Pole Dike Road. The Herring River Restoration Project should fund the raising of the road.*

---

[1] It is not the intent of this document to make determinations about ownership of assets; the language is descriptive only and thus uses the verb "should" to describe anticipated ownership of the Project infrastructure components.

g. Pole Dike culvert/tide gate: *If a tide gate is installed at Pole Dike Road, the Town of Wellfleet should own the new tide gate.*

h. Old County Road/culverts: *The Town of Wellfleet should continue to own Old County Road and its culverts. The Herring River Restoration Project should fund the raising of the road and installation of new culverts.*

i. Bound Brook Road/culverts: *The Town of Wellfleet should continue to own Bound Brook Road and its culverts. The Herring River Restoration Project should fund the raising of the road and installation of new culverts.*

5. The owners (i.e. the Towns and/or CCNS) of the different elements of Restoration Project tide control infrastructure may wish to engage the services of an independent management organization to construct, operate and maintain this infrastructure (such as bridges, dikes, tide gates and culverts) during the implementation phase, or the owners may wish to perform these functions in-house. Long-term, operation and maintenance responsibilities should be the responsibility of the owner of each element of Project infrastructure.

6. Funding

a. This Memorandum of Understanding and the obligations of the NPS hereunder shall be subject to the availability of funding and staffing, and nothing contained herein shall be construed as binding the NPS to expend in any one fiscal year any sum in excess of appropriations made by Congress and administratively allocated for the purpose of this Agreement for the fiscal year, or to involve the NPS in any contract or other obligation for the further expenditure of money in excess of such appropriations or allocations.

b. This Memorandum of Understanding and the obligations of the Towns hereunder shall be subject to the availability of funding and staff, and nothing herein shall be construed as binding the Towns to expend in any one fiscal year any sums in excess of those appropriated by Town Meeting and made administratively available for the purpose of this Agreement for the fiscal year.

c. Each party shall bear its own costs associated with its participation in this Memorandum of Understanding without reimbursement.

7. This Memorandum of Understanding and the obligations of the NPS hereunder are subject to the laws, regulations and policies governing the NPS and CCNS whether now in force or hereafter enacted or promulgated.

8. This Memorandum of Understanding and the obligations of the Towns hereunder are subject to the laws, regulations, Town Meeting votes and policies governing the Towns, whether now in force or hereafter enacted or promulgated.

9. No Member of, Delegate to, or Resident Commissioner in, Congress shall be admitted to any share or part of this Agreement or to any benefit to arise therefrom, unless the share or part or benefit is for the general benefit of a corporation or company.

10. No part of the money appropriated by any enactment of Congress shall, in the absence of express authorization by Congress, be used directly or indirectly to pay for any personal service, advertisement, telegram, telephone, letter, printed or written matter, or other device, intended or designed to influence in any manner a Member of Congress, a jurisdiction, or an official of any government, to favor, adopt, or oppose, by vote or otherwise, any legislation, law, ratification, policy or appropriation, whether before or after the introduction of any bill, measure, or resolution proposing such legislation, law, ratification, policy or appropriation; but this shall not prevent officers or employees of the United States or of its departments or agencies from communicating to Members of Congress on the request of any such Member or official, at his request, or to Congress or such official, through the proper official channels, requests for any legislation, law, ratification, policy or appropriations which they deem necessary for the efficient conduct of the public business, or from making any communication whose prohibition by this section might, in the opinion of the Attorney General, violate the Constitution or interfere with the conduct foreign policy, counter-intelligence, intelligence or national security activities. Violations of this section shall constitute violations of section 1352(a) of title 31.

11. This Agreement contains the sole and entire agreement of the parties. No oral representations of any nature form the basis of or may amend this Agreement.

12. Failure to enforce any provision of this Agreement by either party shall not constitute waiver of that provision, nor a waiver of a claim for subsequent breach of the same type, nor a waiver of any other term of this Agreement. The waiver of any provision must be express and evidenced in writing.

13. This Memorandum of Understanding may be amended by a unanimous vote of all of the participating parties. It shall remain in effect until superseded by a further MOU or inter-municipal agreement(s) to implement its purposes.

IN WITNESS WHEREOF, the parties have cause this instrument to be executed by their respective duly authorized representatives on the day and year indicated.

Name: Date:

_____ _____

Michael Caldwell, Northeast Regional Director
National Park Service

_____ _____

Dennis Murphy, Chair
Wellfleet Board of Selectmen

_____ _____

Paul Wisotsky, Chair
Truro Board of Selectmen

TOWN OF TRURO

Board of Selectmen Agenda Item

DEPARTMENT: Administration

REQUESTOR: Nicole Tudor, Executive Assistant on behalf of Fred Gaechter, President of the Truro Conservation Trust

REQUESTED MEETING DATE: September 13, 2016

ITEM: Approval of 3 Conservation Restrictions with the Truro Conservation Trust 1) 1 Skyview Drive-Friedman property; 2) 15 Cabral Farm Rd-Johnson property; 3) 15 North Pamet Rd-McArdle property

EXPLANATION: The following properties are seeking Conservation Restrictions through the Truro Conservation Trust:

1. 1 Skyview Drive-Friedman
2. 15 Cabral Farm Rd-Estate of Joyce Johnson (Truro Center for the Arts Castle Hill Inc.)
3. 15 North Pamet Rd-McArdle

The Truro Conservation Trust (TCT), "is a leader in creating public-private land conservation partnerships that sustain Truro as a livable, vibrant community for current and future generations. Our mission is to help preserve the rural character of the Town of Truro. This mission is accomplished by acquiring undeveloped land through donation or purchase"; http://truroconservationtrust.org/.

Under MGL Ch. 184, §31-33, the Board of Selectmen's approval is needed in order for a Conservation Restriction to be recorded in perpetuity. The 3 listed properties have been donated to the Compact of Cape Cod Conservation Trusts, Inc. http://thecompact.net/. The properties will later transfer title to the Truro Conservation Trust for permanent open space holding. This approval process is necessary for the State Conservation Land Tax Credit with a third party holding the Conservation Restriction.

Town Counsel has reviewed the documents and approved them as to form.

IMPACT IF NOT APPROVED: The properties of 1 Skyview Drive, 15 Cabral Farm Rd and 15 North Pamet Rd, would not fall under the protection of the Truro Conservation Trust.

SUGGESTED ACTION: *MOTION TO approve the Conservation Restrictions for* 1 Skyview Drive, 15 Cabral Farm Rd and 15 North Pamet Rd *and to authorize the members of the Board of Selectmen to sign the restriction.*

ATTACHMENTS:

1. Skyview Conservation Restriction
2. Joyce Johnson Conservation Restriction
3. McArdle-Pamet River Conservation Restriction

THE COMPACT

OF CAPE COD CONSERVATION TRUSTS, INC.

8 June 2016

Paul C. Wisotzky, Chr.
Board of Selectmen
P.O. Box 2030
Truro MA 02666

Dear Mr. Wisotzky:

I am writing on behalf of Mr. Daniel Friedman of 5 Sky View Drive. The Truro Conservation Trust (TCT) and I are working with him to preserve his vacant lot at 1 Sky View Drive. He proposes to donate it to The Compact, which will later (within this calendar year) transfer title to the Truro Conservation Trust for permanent open space holding. This two-step transfer is needed for Mr. Friedman to receive a state Conservation Land Tax Credit for his land donation (as the Meldahls did late last year for their conservation bargain sale).

Another part of the State tax credit program requires that a third party hold a Conservation Restriction (CR). In this case, TCT will initially hold the CR, but assign the CR to The Compact when title passes to TCT. I apologize for the round-about manner in which this is structured, but it is necessary for the tax credit to flow to Mr. Friedman.

In any case, I am submitting the Conservation Restriction (attached) to the Selectmen for their review and approval under G.L. Ch. 184, s. 31-33. Selectmen approval is needed for the CR to be recorded in perpetuity, safeguarding the land for conservation forever. Please note that the Town Conservation Commission previously reviewed and approved the CR on 6 June 2016.

Please let me know when this item may appear on your agenda. Either I or TCT's Fred Gaechter will appear to answer any questions you may have at that time. Thank you for your kind consideration.

Sincerely,

Mark H. Robinson
Executive Director
Enc.
cc: F. Gaechter, TCT
Rae Ann Palmer, via email

694-7415 ~~3220 Main Street~~, P.O. Box 443, Barnstable MA 02630
Tel (508) ~~362-2565~~ *Fax* ~~(508) 362-4480~~ *email* mark@thecompact.net www.thecompact.net

Grantor: The Compact of Cape Cod Conservation Trusts, Inc.
Grantee: Truro Conservation Trust
Property Address: 1 Sky View Drive, Truro MA
Grantor's Title: Book _____ Page _____ in Barnstable County Registry of Deeds.

CONSERVATION RESTRICTION

THE COMPACT OF CAPE COD CONSERVATION TRUSTS, INC., a Massachusetts charitable corporation with an office at 36 Red Top Road, Brewster MA 02631 and a mailing address of P.O. Box 443, Barnstable MA, its successors and assigns holding any interest in the Premises as hereinafter defined, (hereinafter "Grantor"), as a gift, for no consideration, grants to Robert Bednarek, Alfred Gaechter, Guillermo Chang, Marston D. Hodgin, Philip G. Smith, William C. Worthington, Amanda Reed, Irma Ruckstuhl, Meg Royka, Brian Boyle, Susan Travers, Lisa Maria Tobia, Tom Bow and Valerie Falk, as **TRUSTEES of the TRURO CONSERVATION TRUST**, established under a Declaration of Trust dated November 30, 1981, and recorded at the Barnstable County Registry of Deeds in Book 3428, Page 196, as amended, with a mailing address of P.O. Box 327, North Truro MA 02652, its successors and permitted assigns ("Grantee"), with quitclaim covenants, IN PERPETUITY and exclusively for conservation purposes, the following described **CONSERVATION RESTRICTION** (the "Restriction), on the entirety of one parcel of vacant unregistered land totaling approximately 0.84 acre, located in the Town of Truro, County of Barnstable, Commonwealth of Massachusetts, said parcel being described in Exhibit A and shown on Exhibit A-1, both of which are attached hereto, said parcel hereinafter referred to as the "Premises."

Purpose. This Restriction is defined in and authorized by Article 97 of the Amendments to the Constitution of the Commonwealth of Massachusetts, as amended, acts in amendment thereof or in addition thereto, and Sections 31-33 of Chapter 184 of the General Laws of Massachusetts. Its purpose is to assure that, while permitting the acts and uses described in Section B herein, the Premises will be retained in perpetuity substantially in its natural, scenic and open condition for the protection of its natural resources, plants, wildlife, natural habitat and open space; and, to protect the heathland habitat on the Premises. The conservation of the Premises will yield a significant public benefit because the Premises' protection will advance the following policies and objectives:

WHEREAS, in 1988 the Center for Coastal Studies (Provincetown MA), under contract to the Massachusetts Natural Heritage and Endangered Species Program, conducted an analysis of open canopy uplands on Cape Cod, entitled, "Survey of Sandplain Grasslands and Heathlands on Cape Cod," (LeBlond, 1988), in which he found an interesting intermix of these rare coastal habitats called "grassy heaths," which were most pronounced along the Cape Cod Bay shore in North Truro,

(p. 12); and,

WHEREAS, The Massachusetts Endangered Species Act, M.G.L. c. 131A protects rare species and their habitats, and the Massachusetts Natural Heritage and Endangered Species Program ("Mass.NHESP") has designated as *Priority Habitats* the known geographical extent of habitat for state-listed rare plant and animal species; and,

WHEREAS, in 2010, the Massachusetts Department of Fish and Game and The Nature Conservancy's Massachusetts Program published a report entitled *BioMap2: Preserving the Diversity of Massachusetts in a Changing World*, which identified Core Habitat areas "critical for the long-term persistence of rare species and other Species of Conservation Concern, as well as a wide diversity of natural communities and intact ecosystems across the Commonwealth;" and identified Core Habitat areas, being of utmost priority to protect across the state; and,

WHEREAS, in 2003, *Statewide Land Conservation Plan* was drafted, which identifies the most significant available, undeveloped and unprotected open space lands needed to protect, among other things, biodiversity habitats; and,

WHEREAS, in 1981, the Massachusetts Department of Environmental Management designated an area near and along the Truro shore of Cape Cod Bay as a Noteworthy Landscape under its Scenic Landscape Inventory; and,

WHEREAS, in July 1991 the Barnstable Assembly of Delegates, pursuant to the Cape Cod Commission Act (Chapter 716 of the Acts of 1989), adopted a *Regional Policy Plan*, amended in 1996, 2002 and 2009, which provided, *inter alia* (references are to the 2009 Plan):

- a Wildlife and Plant Habitat Goal to "prevent loss or degradation of critical wildlife and plant habitat…and to maintain existing populations and species diversity" (WPH1), stating that "renewed commitment to protect the most ecologically sensitive undeveloped lands through land acquisition and other permanent conservation measures is also warranted;" and,
- an Open Space and Recreation Goal to "preserve and enhance the availability of open space that provides wildlife habitat…and protects the region's natural resources and character" (OS1) with a recommended Town Action of working with "local land conservation organizations to identify, acquire by fee simple or conservation restriction, and manage open space to meet projected community needs;" and,

WHEREAS, at its 2005 Annual Town Meeting, the Town of Truro adopted a *Local Comprehensive Plan*, which stated goals included, among other things:

- a Wetland and Wildlife Goal to "take measures to prevent loss or degradation of critical wildlife and plant habitat…, and maintain, in so far as possible, existing populations and species diversity;"
- an Open Space and Recreation Goal to "preserve and enhance the availability of open space in order to provide wildlife habitat, recreation opportunities, and protect the natural resources, scenery, and character of Truro," with a policy of protecting as much as possible significant natural and fragile areas including significant scenic views and land forms, and a strategy of working with other public and private organizations to purchase private property to provide protection for sensitive areas and historic and visual areas; and,

WHEREAS, in 2009, the Town of Truro developed an *Open Space and Recreation Plan* establishing goals that "preserve environmental resources for human use while protecting fragile habitats and natural communities and allowing for passive human enjoyment of the environment," and which identified, among others, the following specific goals:

- Preserve and enhance the availability of open space in order to provide wildlife habitat, recreation opportunities, and protect the natural resources, scenery, and character of Truro;
- Maintain the town's historic and rural character, including by reducing density and protecting wildlife and endangered species;
- Prevent loss or degradation of critical wildlife and plant habitat, minimize the impact of development on wildlife and plant habitat, and maintain, in so far as possible, existing populations and species diversity; and,

WHEREAS, the 2009 *Open Space and Recreation Plan* also established as one of its objectives, placing conservation restrictions on public and private open space for added protection; and,

WHEREAS, in 1999 the Town of Truro adopted a *Conservation Restriction Program*, consisting of policies and guidelines approved by the Board of Selectmen in consultation with the Open Space Committee, Conservation Commission and the Board of Assessors, which encourages the use of conservation restrictions in perpetuity as a means of protecting the environment, and which further specifies that "Lands proposed for restriction may be presumed to be in the public interest if those lands contribute to the protection of the community's natural resources as identified in the following list: (*relevant excerpts below*)

1.b.(5) rare species, other wildlife
5.k. wildlife and habitat for both flora and fauna
rare biological habitats; and,

WHEREAS, The Nature Conservancy (TNC) has identified areas considered more resilient to climate change and thus more likely to support conservation, and has mapped such areas as *Resilient Sites for Terrestrial Conservation Focal Areas*; and,

WHEREAS, preservation of the Premises satisfies each of these objectives enumerated above because the Premises:

- is comprised of grassy heath habitat, a vanishing rare open habitat of Cape Cod;
- is located within the Noteworthy Scenic Landscape identified by the State;
- lies completely within the Statewide Land Conservation Plan;
- lies 100% within a TNC-identified Resilient Area important for climate change adaptation;
- abuts Truro Conservation Trust protected open space;
- is wholly within an area of BioMap2 Core Habitat and Priority Habitat, as identified by the Mass. NHESP; and,
- is a substantial contributing element to the overall scenic and cultural character of the area by maintaining the land predominantly in its natural condition; and,

WHEREAS, accordingly, the Premises possess significant open, natural, and scenic values (collectively, "conservation values") of great importance to the Grantee and the people of Truro and the Commonwealth of Massachusetts; and,

WHEREAS, the Town of Truro has in recent years come under increasing pressure for development, and such development can destroy or otherwise severely impact the open character, natural resources, and scenic beauty of the area; and,

WHEREAS, the Grantee is a publicly-supported, tax-exempt non-profit organization whose primary purpose is to preserve and conserve natural areas for aesthetic, scientific and educational purposes; and,

WHEREAS, the Grantor intends, as owners of the Premises, to convey to the Grantee the right to preserve and protect the conservation values of the Premises in perpetuity.

NOW, THEREFORE, in consideration of the above and the mutual covenants, terms, conditions, and restrictions contained herein, the Grantor and the Grantee voluntarily agree that the CONSERVATION RESTRICTION described herein is an appropriate means to achieve the community's open space goals and objectives.

The terms of this Conservation Restriction are as follows:

A. Prohibited Uses. Except as to reserved rights set forth in Section B below, neither the Grantor nor its successors or assigns will perform or permit others to perform the following acts or uses, which are prohibited on, above and below the Premises:

1) Construction or placing or allowing to remain of any temporary or permanent building, structure, facility or improvement, including but not limited to any dwelling unit or habitable living space, tennis court, landing strip, mobile home, swimming pool, asphalt or concrete pavement, antenna, tower, windmill, water tower, water storage tank, solar array, road, trail or other structure or facility on, under or above the Premises;

2) Mining, excavating, or removing from the Premises of soil, loam, peat, gravel, sand, rock or other mineral resource or natural deposit from the Premises;

3) Placing, filling, storing or dumping on the Premises of soil, refuse, trash, vehicle bodies or parts, rubbish, debris, junk, tree cuttings generated off-site, waste or other substance or material whatsoever;

4) Cutting, removing or otherwise destroying trees, grasses or other vegetation;

5) Activities detrimental to drainage, water or soil conservation, erosion control or the quality of surface or ground water;

6) Any commercial recreation, commercial agriculture, or business or industrial use;

any animal husbandry or horse paddocking or stables, paddocks, grazing areas or enclosures and the storage or dumping of manure or other animal wastes;

7) Hunting or trapping;

8) Any use inconsistent with conservation and passive recreation;

9) The use, parking or storage of motorcycles, motorized trail bikes, snowmobiles and all other motor vehicles, except as necessary by police, firemen or other governmental agencies in carrying out their lawful duties;

10) Conveyance of a part or portion of the Premises alone, or division or subdivision of the Premises (as compared to conveyance of the Premises in its entirety which shall be permitted), it being the intent to keep the Premises in single ownership;

11) All development rights in the Premises are terminated and extinguished by this Restriction; and the Premises may not be used for the purpose of calculating the amount of Grantor's or any other land available for additional subdivision or calculating the building requirements on this or any other land owned by the Grantor or any other person; and,

12) Any other use of the Premises, which will materially impair its conservation values or purposes.

B. Reserved Rights. The following uses and activities are permitted, but only if such uses and activities do not materially impair the purposes of this Restriction:

1. In order to protect the conservation values of the Premises, the Grantor, Grantee, and the general public may use the property only for purposes consistent with conservation and passive recreation which for the purposes of this paragraph shall mean any activity of quiet enjoyment that can be casually performed outdoors with minimum disturbance of an area's natural condition and no disturbance of the steep slope on the Premises;

2. Active measures taken in order to prevent unauthorized vehicle entry and dumping;

3. The erection and maintenance of wooden split-rail or comparable sight-pervious fencing no more than three (3) feet in height and designed to guide and control foot traffic and for boundary delineation purposes, so long as the dimensions and design of said fences do not impede free wildlife passage;

4. In accordance with best silvicultural practices that support the long-term viability of the grassy heath habitat on the Premises, and provided surrounding vegetation is not substantially disturbed, the right to remove invasive non-indigenous plant species and control poison ivy and other potentially hurtful plant life and other plant life that threatens indigenous species anywhere within the Premises; the right to remove woody vegetation, in a manner that minimizes disturbance of the soil, in order to maintain the open heath character of the habitat, as approved by the Grantee;

5. The right to conduct archaeological activities, including without limitation archaeological research, surveys, excavation and artifact retrieval, but only (a) after written notification to and approval by Grantee, and (b) in accordance with an archaeological field investigation plan prepared by or on behalf of the Grantor and approved in advance of such activity, in writing, by the Massachusetts Historic Commission ("MHC") State Archaeologist as required by Massachusetts General Laws. A copy of the results of any scientific investigation on the Premises is to be provided to the Grantee. Plans for restoration of the site of any archaeological activity shall be submitted to the Grantee in advance of restoration, and such restoration shall be conducted only in accordance with a plan approved by the Grantee;

6. Activities detrimental to archeological and historic resources, including but not limited to earth moving and the alteration of historic stone walls/cellar holes/features, shall not be deemed to be detrimental to archeological and historic resources if a description of the proposed activity and its location is submitted in writing (e.g., on a Project Notification Form) with a plan of land (or assessors map) and a USGS map with the Premises outlined thereon, to MHC, and MHC issues a letter stating that the proposed activity is not within a resource area or is determined to not have an adverse effect on said resources. Grantors and Grantee shall make every reasonable effort to prohibit any person from conducting archaeological field investigation on the Premises, including metal detecting, digging, or artifact collecting, without approval of the MHC State Archaeologist (or appropriate successor official), and shall promptly report any such prohibited activity to the MHC State Archaeologist (or appropriate successor official). Grantor and Grantee shall include the prohibition against digging, artifact collecting, or metal detecting in any list of rules for visitors to the Premises;

7. The right to convey the Premises in its entirety;

8. The installation of temporary and permanent boundary monuments delineating the Premises; erection and maintenance of signs identifying ownership of the Premises, its boundaries, its status as conservation land, the restrictions on the use of the Premises, or for providing other like information. Signage will be subject to any applicable regional or local approvals;

9. The right to install a well to serve an adjoining residential lot in accordance with the provisions for said well in the deed running from Daniel Friedman, Trustee to The Compact of Cape Cod Conservation Trusts, Inc. and recorded in the Barnstable County Registry of Deeds in Book _____ Page _____; and,

10. Any work undertaken in conjunction with the reserved rights mentioned above in this Section B. shall seek to minimize disturbance within the Premises. Upon completion of any site work performed in conjunction with this Section B., any disturbed areas shall be restored substantially to match the conditions with respect to soil material, grade, and vegetated ground cover that existed prior to said work in the rare grassy heath habitat; and, the right to plant native grassy heath plant species; slash shall be removed from the Premises.

The exercise of any right or obligation reserved by the Grantor under this Section B shall be in compliance with all permitting requirements, the then-current Zoning By-Laws of the Town of Truro, and all other applicable federal, state and local law. The inclusion of any reserved right in this Section B requiring a permit from a public agency does not imply that the Grantee or the Commonwealth takes any position on whether such permit should be issued.

C. Notice and Approval. Whenever notice to or approval by the Grantee is required under the provisions herein, the Grantor shall notify the Grantee in writing, by a method requiring receipt, not less than sixty (60) days prior to the date the Grantor intends to undertake the activity in question. The notice shall describe the nature, scope, design, location, timetable and any other material aspect of the proposed activity in sufficient detail to permit the Grantee to make an informed judgment as to its consistency with the purposes and performance standards of this Restriction. Where the Grantee's approval is required, the Grantee shall grant or withhold its approval in writing within sixty days (60) days of receipt of the Grantor's written request therefore. Failure of Grantee to deliver a written response to Grantor in accordance with the prescribed timeframe shall be deemed to constitute written approval by Grantee of any request submitted for approval that is not prohibited herein and that will not materially impair the purposes of this Conservation Restriction, provided that Grantor's request sets forth in substance the provisions of this section relating to deemed approval after the passage of time.

D. Extinguishment. If circumstances arise in the future such as to render the purpose of this Restriction impossible to accomplish, this Restriction can only be terminated or extinguished, whether in whole or in part, by judicial proceedings in a court of competent jurisdiction under applicable law, with Grantee's permission and after review and approval through any process established under Article 97 of the Constitution of the Commonwealth, if applicable, and after review by the Massachusetts Secretary of Energy and Environmental Affairs. If any change in conditions ever gives rise to extinguishment or other release of the Restriction under applicable law, then the Grantee, on a subsequent sale, exchange or involuntary conversion of the Premises, shall be entitled to a portion of the proceeds in accordance with Section D.1. below, subject, however, to any applicable law that expressly provides for a different disposition of the proceeds or to the terms of any gift, grant, or funding requirements. The Grantee shall use its share of the proceeds in a manner consistent with the conservation purposes set forth herein.

D.1. Proceeds. The Grantor and the Grantee agree that the donation of this Restriction gives rise to a real property right, immediately vested in the Grantee, with a value that is equal to ten percent (10%) of the fair market value. For the purposes of this paragraph, said proportionate value remain constant. The Grantee shall use its share of the proceeds, if any, from the taking in a manner consistent with the purposes herein.

D.2. Grantor/Grantee Cooperation Regarding Public Action. Whenever all or part of the Premises or any interest therein is taken by public authority under power of eminent domain or other act of public authority, then the Grantor and the Grantee shall cooperate in recovering the full value of all direct and consequential damages resulting from such action. All related expenses incurred by the Grantor and the Grantee under this Section shall first be paid out of any recovered proceeds, and the remaining proceeds shall be distributed between the Grantor and the Grantee in shares equal to such proportionate value, as noted in Section D.1, above, subject to the terms of any

gift, grant or funding requirements. The Grantee shall use its share of the proceeds in a manner consistent with the purposes of this grant.

E. Access. The Restriction hereby conveyed does not grant to the Grantee, to the public generally, or to any other person any right to enter upon the Premises, except subject to the limitations listed below:

1) To the Public: to the public generally for walking and nature study; bicycling and horseback riding are not permitted due to the sensitive habitat and steep topography of the Premises; and,

2) To the Grantee: the Grantee and its representatives are granted the right to enter the Premises (a) after reasonable notification, at reasonable times and in a reasonable manner for the purpose of inspecting the same to determine compliance with the provisions of this Restriction; and (b) after thirty (30) days prior written notice, to take any and all actions with respect to the Premises as may be necessary or appropriate, with or without order of court, to remedy, abate or enforce any violation hereof unless the Grantor has prior to the expiration of said thirty (30) days given written notice to the Grantee reasonably addressing all alleged violations and setting forth a reasonable plan to remedy any such alleged violation and has made reasonable efforts to cease the activity or to begin remediation.

Notwithstanding any public use of the Premises as permitted herein, neither the Grantor nor the Grantee assumes any obligation to maintain the Premises for public passive recreational use. Grantor and Grantee claim all the rights and immunities against liability for injury to the public to the fullest extent of the law.

F. Legal Remedies of the Grantee. The rights hereby granted shall include the right to enforce this Restriction by appropriate legal proceedings and to obtain injunctive and other equitable relief against any violations, including without limitation relief requiring restoration of the Premises to its condition at the time of this grant (it being agreed that the Grantee shall have no adequate remedy at law), and shall be in addition to, and not in limitation of, any other rights and remedies available to the Grantee. Prior to instituting litigation to enforce any violations of this Restriction, however, the Grantee shall first notify the Grantor and request the Grantor to remedy the violation; if the violation is not remedied within sixty (60) days, then the parties shall make a good faith effort to mediate the dispute before litigation is commenced.

Grantee shall not, however, have the right to bring an action against Grantor with respect to a violation of this Conservation Restriction by trespassers or other third persons whose entry on the Property is not authorized or voluntarily acquiesced in by Grantor; Grantor agrees that Grantor will not voluntarily acquiesce in any violation of this Conservation Restriction by trespassers or such other third persons; and Grantor further agrees that, at the request of Grantee, Grantor will make reasonable efforts to deter such activities and to remedy the violation and will cooperate with Grantee to enforce this Conservation Restriction against trespassers and such other third persons.

In the event of a dispute over the boundaries of the Premises, the Grantor shall pay for a survey and permanent boundary markers delineating the Premises.

If Grantee prevails in any action to enforce the terms of this Restriction, the Grantor, its successors and assigns, as the case may be, shall reimburse the Grantee for all reasonable costs and expenses (not including attorney's fees) incurred in enforcing this Restriction or in taking reasonable measures to remedy or abate any violation thereof. If Grantor prevails in any action brought by Grantee to enforce the terms of this Restriction, the Grantee, successors and assigns, as the case may be, shall reimburse the Grantor for all reasonable costs and expenses (not including attorney's fees) incurred in defending such action to enforce this Restriction.

The Grantor, its successors and assigns shall each be liable under this Section for only such violations of this Restriction as may exist during its respective periods of ownership of the Premises. By their acceptance, the Grantee does not undertake any liability or obligation relating to the condition of the Premises, including with respect to compliance with hazardous materials or other environmental laws and regulations, or for acts not caused by the Grantee or its agents. Enforcement of the terms of this Restriction shall be at the discretion of the Grantee, and any election by the Grantee as to the manner and timing of its right to enforce this Restriction or otherwise exercise its rights hereunder shall not be deemed or construed to be a waiver of such rights.

G. Acts Beyond Grantor's Control. Nothing contained in this Restriction shall be construed to entitle the Grantee to bring any action against the Grantor, for any injury to or change in the Premises resulting from causes beyond the Grantor's control, including, but not limited to, fire, road drainage, flood, storm, natural erosion, or from any prudent action taken by the Grantor, under emergency conditions to prevent, abate, or mitigate significant injury to the Premises resulting from such causes. Notwithstanding the foregoing, nothing herein shall preclude Grantor's and Grantee's rights to pursue any third party for damages to the Premises from vandalism, trespass, or any other violation of the terms of this Restriction.

H. Duration and Assignability. The burdens of this Restriction shall run with the Premises in PERPETUITY and shall be enforceable against the Grantor, its successors and assigns holding any interest in the Premises. The Grantee is authorized to record or file any notices or instruments appropriate to assuring the perpetual enforceability of this Restriction; and the Grantor on behalf of its successors and assigns, appoints the Grantee as its attorney-in-fact to execute, acknowledge and deliver any such instruments on its behalf. Without limiting the foregoing, the Grantor and its successors and assigns agree themselves to execute any such instrument upon request.

The benefits of this Restriction shall run to the Grantee, shall be in gross and shall not be assignable by the Grantee, except in the following instances from time to time:

(i) as a condition of any assignment, the Grantee requires that the purpose of this Restriction continue to be carried out,
(ii) the assignee, at the time of assignment, qualifies under Section 170(h) of the Internal Revenue Code of 1986, as amended, and applicable regulations thereunder, and under Section 32 of Chapter 184 of the General Laws as a donee eligible to receive this Restriction directly; and,
(iii) the Grantee complies with the provisions required by Article 97 of the amendments to the Constitution of the Commonwealth of Massachusetts, if applicable.

I. Subsequent Transfers. The Grantor agrees to incorporate by reference the terms of this Restriction in any deed or other recordable legal instrument by which Grantor conveys any interest in all or a portion of the Premises, including, without limitation, a leasehold interest. Grantor further agrees to give written notice to the Grantee of the transfer of any interest at least twenty (20) days prior to the date of such transfer. Failure of the Grantor to do either shall not impair the validity of this Restriction or limit its enforceability in any way.

J. Termination of Rights and Obligations. Notwithstanding anything to the contrary contained herein, the rights and obligations under this Restriction of any party holding an interest in the Premises terminate upon transfer of that party's interest, except that liability for acts or omissions occurring prior to the transfer, and liability for the transfer itself if the transfer is a violation of this Restriction, shall survive the transfer.

K. Estoppel Certificates. Upon request by the Grantor, the Grantee shall, upon thirty (30) days notice, execute and deliver to the Grantor any document, including an estoppel certificate, which certifies the Grantor's compliance with any obligation of the Grantor contained in this Restriction, and which otherwise evidences the status of this Restriction as may be requested by the Grantor.

L. Amendment. If circumstances arise under which an amendment to or modification of this CR would be appropriate, Grantor and the Grantee may by mutual consent amend in writing the applicable term or provision hereof provided that the amendment complies with the applicable requirements of Article 97 of the Amendments to the Constitution of the Commonwealth of Massachusetts, Massachusetts General Law, Ch. 184, sec. 31-33, or any successors thereto, and provided that any such amendment, together with any approvals necessary to its effectiveness, including that of the Massachusetts Secretary of Energy and Environmental Affairs, shall be recorded with the Barnstable County Registry of Deeds. Any amendment shall be consistent with the purposes of this Restriction, shall not diminish the conservation values of the Premises and shall not affect its perpetual duration.

M. Non-Merger: The parties intend that the doctrine of merger shall not apply to this conveyance, and that no transfer of Grantor's or Grantee's interest in the Premises and no acquisition of any additional interest in the Premises by Grantor or Grantee shall cause this Conservation Restriction to merge with the fee or have the effect of causing any of the terms hereof to be rendered unenforceable by reason of the so-called doctrine of merger. No deed shall be effective until this Restriction has been assigned to a non-fee owner or other action taken to avoid a merger and preserve the terms and enforceability of this Restriction by a non-fee owner. It is the intent of the parties that the Premises will be subject to the terms of this Restriction in perpetuity.

N. Miscellaneous Provisions

1) Controlling Law. The interpretation and performance of this Restriction shall be governed by the laws of the Commonwealth of Massachusetts.

2) Construction. Any general rule of construction to the contrary notwithstanding, this Restriction shall be liberally construed in favor of its purposes. If any provision in this instrument is found to be ambiguous, an interpretation consistent with the purposes of

this Restriction that would render the provision valid shall be favored over any interpretation that would render it invalid.

3) Severability. If any provision of this Restriction shall to any extent be held invalid, the remainder shall not be affected.

4) Entire Agreement. This obligation sets forth the entire agreement of the parties with respect to the Restriction and supersedes all prior discussions, negotiations, understandings, or agreements relating to the Restriction, all of which are merged herein.

5) Joint Obligation. The obligations imposed by this Restriction upon the parties that together comprise "Grantor" shall be joint and several.

6) Captions. The captions in this instrument have been inserted solely for convenience of reference and are not a part of this instrument and shall have no effect upon construction or interpretation.

7) Excise. No Massachusetts deed excise tax stamps are required by Chapter 64D, Section 1, as a municipality is a party to this instrument.

O. Effective Date. Grantor and Grantee intend that the restrictions arising hereunder take effect on the day and year this Restriction is recorded in the official records of the Barnstable County Registry of Deeds, after all signatures required by Section 32, Chapter 184 of the General Laws of Massachusetts have been affixed hereto. This document shall be recorded in a timely manner upon execution by all parties.

Attached hereto and incorporated herein are the following:

Signatures:

Grantor - The Compact of Cape Cod Conservation Trusts, Inc.
Grantee – Truro Conservation Trust
Town of Truro Board of Selectmen
Secretary, MA Executive Office of Energy and Environmental Affairs

Exhibits:

A. Legal Description of the Premises

A-1. CR Sketch Plan

B. Baseline Study

[REMAINDER OF PAGE INTENTIONALLY LEFT BLANK]

At a meeting duly held on _____2016, The Compact of Cape Cod Conservation Trusts, Inc. voted to grant the foregoing Conservation Restriction to the Truro Conservation Trust.

THE COMPACT OF CAPE COD
CONSERVATION TRUSTS, INC.

By:_____
Leonard W. Johnson , President

By:_____
Henry Lind, Treasurer

COMMONWEALTH OF MASSACHUSETTS

Barnstable, ss. _____, 2016

Then personally appeared the above-named Leonard W. Johnson, President, and Henry Lind, Treasurer, of The Compact of Cape Cod Conservation Trusts, Inc., the corporation named in the foregoing instrument, and proved to me through satisfactory evidence of identification, which was personal knowledge of identity, to be the persons whose names are signed on the document and acknowledged they are duly authorized to act on behalf of said corporation, the seal affixed to said instrument is the corporate seal of said corporation, and foregoing instrument to be the free act and deed of the corporation, before me.

_____
Mark H. Robinson, Notary Public:
My commission expires: 24 July 2020

ACCEPTANCE OF GRANT

The above Conservation Restriction from The Compact of Cape Cod Conservation Trusts, Inc. is accepted this _____ day of _____, 2016.

Trustees of Truro Conservation Trust:

By: _____
Trustee, but not individually

By: _____
Trustee, but not individually

By: _____
Trustee, but not individually

By: _____
Trustee, but not individually

By: _____
Trustee, but not individually

By: _____
Trustee, but not individually

By: _____
Trustee, but not individually

By: _____
Trustee, but not individually

By: _____
Trustee, but not individually

By: _____
Trustee, but not individually

By: _____
Trustee, but not individually

By: _____
Trustee, but not individually

By: _____
Trustee, but not individually

By: _____
Trustee, but not individually

COMMONWEALTH OF MASSACHUSETTS

Barnstable, ss. _____, 2016

Then personally appeared the above-named Alfred Gaechter, the person whose name is signed on the document and proved to me through satisfactory evidence of identification, which was personal knowledge of identity, and who being by me duly sworn did say that he is the President/Trustee of the Truro Conservation Trust and acknowledged the foregoing instrument to be his free act and deed on behalf of the Trustees of the Truro Conservation Trust, before me.

_____
Mark H. Robinson, Notary Public
My commission expires: 24 July 2020

APPROVAL OF GRANT

At a public meeting duly held on _____, 2016 the Selectmen of the Town of Truro, Massachusetts voted to approve, pursuant to M.G.L. Chapter 184, Section 32, the foregoing Restriction from The Compact of Cape Cod Conservation Trusts, Inc. to the Truro Conservation Trust.

_____ _____

_____ _____

_____

COMMONWEALTH OF MASSACHUSETTS

Barnstable, ss. _____, 2016.

Then personally appeared the above-named Paul Wisotzky, the person whose name is signed on the document and proved to me through satisfactory evidence of identification, which was personal knowledge of identity, and who being by me duly sworn did say that he is the Chair of the Selectmen of the Town of Truro, the municipal corporation named in the foregoing instrument; that he is duly authorized to act on behalf of said corporation; that the seal affixed to said instrument is the corporate seal of said corporation; and acknowledged the foregoing instrument to be the free act and deed of said corporation.

_____
Notary Public
My commission expires:

APPROVAL BY
SECRETARY OF ENERGY AND ENVIRONMENTAL AFFAIRS
COMMONWEALTH OF MASSACHUSETTS

The undersigned, Secretary of the Executive Office of Energy & Environmental Affairs of the Commonwealth of Massachusetts, hereby certifies that the foregoing Restriction from The Compact of Cape Cod Conservation Trusts, Inc. to the Truro Conservation Trust has been approved in the public interest pursuant to M.G.L. Chapter 184, Section 32. Said approval is not to be construed as representing the existence or non-existence of any pre-existing rights of the public, if any, in and to the Premises, and any such pre-existing rights of the public, if any, are not affected by the granting of this Restriction.

Date:_____, 2016

_____
Matthew A. Beaton, Secretary
Executive Office of Energy
& Environmental Affairs

COMMONWEALTH OF MASSACHUSETTS

Suffolk, ss. _____, _____.

Then personally appeared the above-named Matthew A. Beaton, and proved to me through satisfactory evidence of identification, which was personal knowledge of identity, to be the person whose name is signed on the document and acknowledged to me that he signed it voluntarily as Secretary of Energy and Environmental Affairs for the Commonwealth of Massachusetts, for its stated purpose.

_____
Notary Public
My commission expires:

EXHIBIT A

SKY VIEW CONSERVATION RESTRICTION
TRURO MA

DESCRIPTION OF THE PREMISES

The land subject to this Restriction (the "Premises") is described as being the entirety of a parcel of vacant land situated in the Town of Truro, Barnstable County, Massachusetts, bounded and described as follows:

> **LOT 12B** shown on a "Plan of Land in Truro being a division of Lot 12 as shown in Plan Book 317 Page 37 made for Ellen Schiereck and Elizabeth A. Sluzis, Scale 1" = 40', September 16, 2008, Slade Associates, Inc. Registered Land Surveyors, Rte 6 & Pine Point Rd, Wellfleet, MA 02667," as recorded with the Barnstable County Registry of Deeds in Plan Book 627 Page 98.
>
> Containing 36,766 square feet (0.84 acre), more or less, according to survey.

A reduced copy of said plan is attached hereto and recorded herewith as Exhibit A-1.

For our title, see deed recorded in Barnstable County Registry of Deeds in Deeds Book _____ Page _____.

Property Address: 1 Sky View Drive, Truro, Massachusetts

Town of Truro Assessors Map 42, Parcel 305

EXHIBIT A-1
SKY VIEW CONSERVATION RESTRICTION
TRURO MA
SKETCH OF THE PREMISES

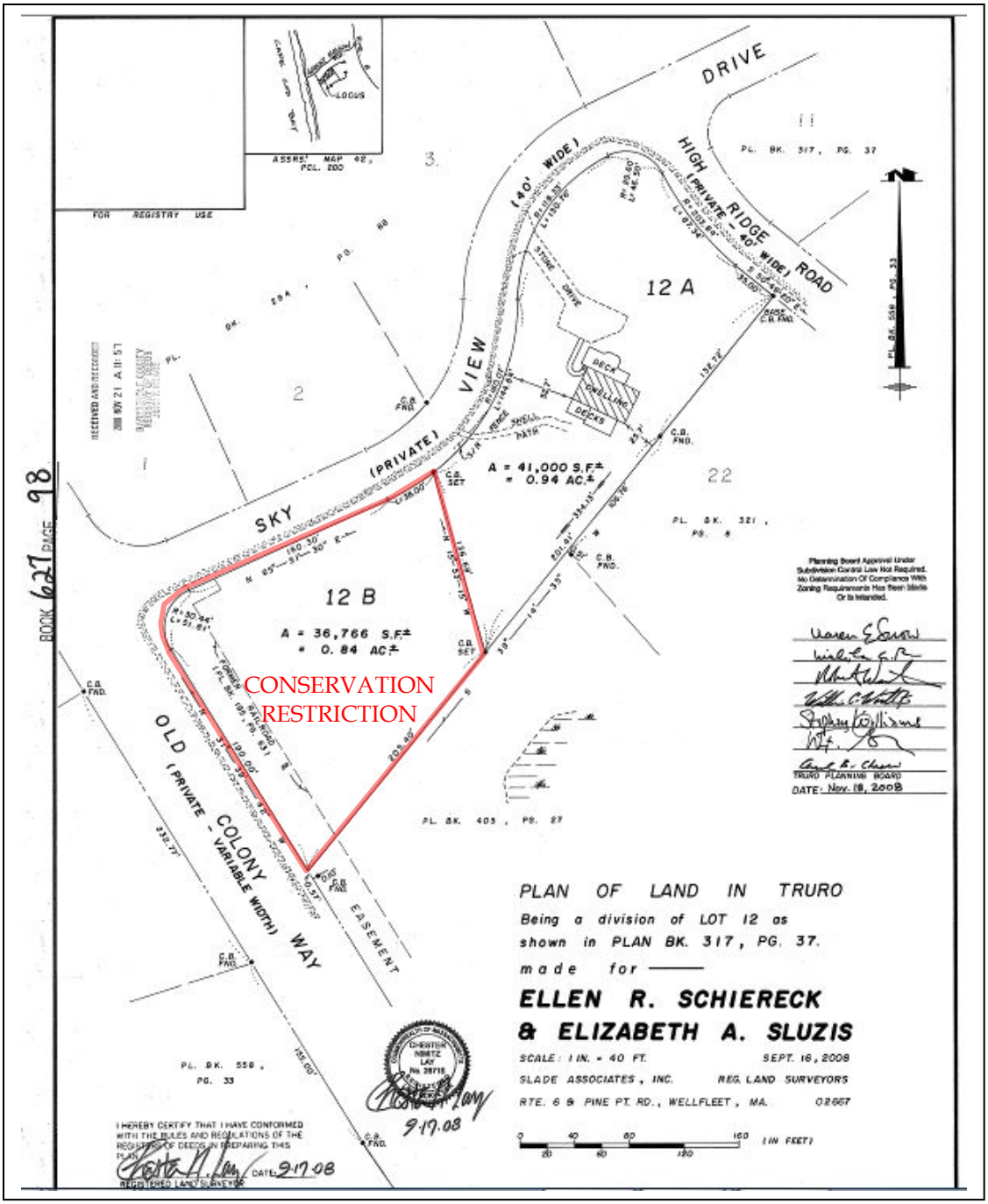

Agenda Item: 5C2

Grantor: Truro Center for the Arts at Castle Hill, Inc.
Grantee: Truro Conservation Trust
Property Address: 15 Cabral Farm Road, Truro MA
Grantor's Title: Estate of Joyce Johnson BAP#_____

CONSERVATION RESTRICTION

TRURO CENTER FOR THE ARTS AT CASTLE HILL, INC., a Massachusetts charitable corporation with a mailing address at P.O. Box 756, Truro MA 02666, , its successors and assigns holding any interest in the Premises as hereinafter defined, (hereinafter "Grantor"), for no consideration, grants to Robert Bednarek, Tom Bow, Guillermo Chang, Alfred Gaechter, Marston D. Hodgin, Philip G. Smith, William C. Worthington, Amanda Reed, Irma Ruckstuhl, Meg Royka, Brian Boyle, Lisa Tobia, and Susan Travers, as **TRUSTEES of the TRURO CONSERVATION TRUST**, established under a Declaration of Trust dated November 30, 1981, and recorded at the Barnstable County Registry of Deeds in Book 3428, Page 196, as amended, with a mailing address of P.O. Box 327, North Truro MA 02652, its successors and permitted assigns ("Grantee"), with quitclaim covenants, IN PERPETUITY and exclusively for conservation purposes, the following described **CONSERVATION RESTRICTION**, on approximately 0.91 acres of unregistered land, located in the Town of Truro, County of Barnstable, Commonwealth of Massachusetts, said land being described in Exhibit "A" and shown on Exhibit "A-1 and A-2" both of which are attached hereto, said land hereinafter referred to as the "Premises." The Grantor and Grantee, their successors and assigns, are bound by and subject to the terms and conditions of this Conservation Restriction.

Purposes: This Conservation Restriction is defined in and authorized by Sections 31-33 of Chapter 184 of the General Laws and otherwise by law. Its purpose is to assure that the Premises will be retained in perpetuity substantially in its natural, scenic and open condition as set forth herein; and to prevent any use that would materially impair or interfere with the conservation values of the Premises. The conservation of the Premises will yield a significant public benefit because the Premises' protection will advance the following policies and objectives:

WHEREAS, The Massachusetts Endangered Species Act, M.G.L. c. 131A protects rare species and their habitats, and the Massachusetts Natural Heritage and Endangered Species Program ("MNHESP") has designated as Priority Habitats the known geographical extent of habitat for state-listed rare plant and animal species; and,

WHEREAS, in 2010, the Massachusetts Department of Fish and Game and The Nature Conservancy's Massachusetts Program published a report entitled *BioMap2: Preserving the Diversity of Massachusetts in a Changing World*, which identified Core Habitat areas "critical

for the long-term persistence of rare species and other Species of Conservation Concern, as well as a wide diversity of natural communities and intact ecosystems across the Commonwealth;" and,

WHEREAS, in 2003, the Statewide Land Conservation Plan was drafted, which identifies the most significant available, undeveloped and unprotected open space lands needed to protect, among other things, biodiversity habitats; and the Premises is identified a such land; and,

WHEREAS, in July 1991 the Barnstable Assembly of Delegates, pursuant to the Cape Cod Commission Act (Chapter 716 of the Acts of 1989), adopted a *Regional Policy Plan*, amended in 1996, 2002 and 2009, which provided, *inter alia* (references are to the 2009 Plan):

- Wildlife and Plant Habitat Goal to "prevent loss or degradation of critical wildlife and plant habitat…and to maintain existing populations and species diversity" (WPH1); stating that "renewed commitment to protect the most ecologically sensitive undeveloped lands through land acquisition and other permanent conservation measures is also warranted;"
- Open Space and Recreation Goal to "preserve and enhance the availability of open space that provides wildlife habitat…and protects the region's natural resources and character" (OS1) with a recommended Town Action of working with "local land conservation organizations to identify, acquire by fee simple or conservation restriction, and manage open space to meet projected community needs. Priority should be given to the protection of significant natural and fragile areas as identified on the Cape Cod Significant Natural Resource Areas map;" and,
- Heritage Preservation and Community Character Goal to "protect and preserve the important historic and cultural features of Cape Cod's landscape…that are critical components of the region's heritage and economy" (HPCC1); and,

WHEREAS, the *Regional Policy Plan* includes a Significant Natural Resources Areas Map, which shows, among other things, rare species habitat, priority natural communities, wetlands, and critical upland areas; and,

WHEREAS, at its 2005 Annual Town Meeting, the Town of Truro adopted a *Local Comprehensive Plan*, which stated goals included, among other things:

- a Water Resources Goal to "maintain the overall quality and quantity of Cape Cod groundwater;
- a Wetland and Wildlife Goal to "take measures to prevent loss or degradation of critical wildlife and plant habitat…, and maintain, in so far as possible, existing populations and species diversity;"
- an Open Space and Recreation Goal to "preserve and enhance the availability of open space in order to provide wildlife habitat, recreation opportunities, and protect the natural resources, scenery, and character of Truro," with a policy of protecting as much as possible significant natural and fragile areas including significant scenic views, and a strategy of working with other public and private organizations to purchase private property to provide protection for sensitive areas and historic and visual areas; and,
- an Historic Preservation/Community Character Goal to "protect and preserve the important historic, cultural, and scenic features of the Truro landscape, recognizing that

they are critical components of the town's heritage, character, and economy"; and,

WHEREAS, in 2009, the Town of Truro developed an *Open Space and Recreation Plan* establishing goals that "preserve environmental resources for human use while protecting fragile habitats and natural communities and allowing for passive human enjoyment of the environment," and which identified, among others, the following specific goals:

- Preserve and enhance the availability of open space in order to provide wildlife habitat, recreation opportunities, and protect the natural resources, scenery, and character of Truro;
- Maintain the town's historic and rural character, by reducing density, securing future well sites, developing a Route 6 greenbelt, protecting wildlife and endangered species, and providing additional passive recreation areas;
- Prevent loss or degradation of critical wildlife and plant habitat, minimize the impact of development on wildlife and plant habitat, and maintain, in so far as possible, existing populations and species diversity; and,

WHEREAS, in 1999 the Town of Truro adopted a *Conservation Restriction Program*, consisting of policies and guidelines approved by the Board of Selectmen in consultation with the Open Space Committee, Conservation Commission and the Board of Assessors, which encourages the use of conservation restrictions in perpetuity as a means of protecting the environment, and which further specifies that "Lands proposed for restriction may be presumed to be in the public interest if those lands contribute to the protection of the community's natural resources as identified in the following list: (*relevant excerpts below*)

1.b.(2) forests and woodlands
1.b.(5) rare species, other wildlife
1.b.(6) waters resources: ground water
1.b.(8) scenic roads, public views and rural character
1.b.(12)greenbelts
5.k. wildlife and habitat for both flora and fauna; and,

WHEREAS, preservation of the Premises satisfies each of these enumerated objectives because the Premises:

1) is comprised of upland and freshwater wetlands;
2) lies 100% within an MNHESP Priority Habitat for Rare Species;
3) lies 100% within BioMap2 Core Habitat;
4) lies almost completely within the Statewide Land Conservation Plan;
5) maintains the Town of Truro's rural character;
6) lies 100% within a Significant Natural Resources Area of the 2009 Regional Policy Plan;
7) is a substantial contributing element to the overall scenic and historic character of the area by adding to and maintaining the land predominantly in its natural condition; and,

WHEREAS, accordingly, the Premises possess significant open, natural, and scenic values (collectively, "conservation values") of great importance to the Grantee and the people of Truro and the Commonwealth of Massachusetts; and,

WHEREAS, the Town of Truro has in recent years come under increasing pressure for development, and such development can destroy or otherwise severely impact the open character, natural resources, and scenic beauty of the area; and,

WHEREAS, the Grantor and Grantee are publicly-supported, tax-exempt non-profit organizations whose primary purpose is to preserve and conserve natural areas for aesthetic, scientific and educational purposes; and,

WHEREAS, the Grantor intends, as owners of the Premises, to convey to the Grantee the right to preserve and protect the conservation values of the Premises in perpetuity.

WHEREAS, the Town of Truro has in recent years come under increasing pressure for development, and such development can destroy or otherwise severely impact the open character, natural resources, and scenic beauty of the area; and,

WHEREAS, the Grantee agrees by accepting this grant to honor the intentions of the Grantor stated herein and to preserve and protect in perpetuity the above-mentioned Conservation Values of the Premises for the benefit of this generation and the generations to come.

NOW, THEREFORE, in consideration of the above and the mutual covenants, terms, conditions, and restrictions contained herein, the Grantor and the Grantee voluntarily agree that the CONSERVATION RESTRICTION described herein is an appropriate means to achieve the community's open space goals and objectives and to protect and enhance natural and scenic values of Cape Cod.

DEFINITIONS:

PREMISES: The Premises subject to this Restriction is comprised of a Restricted Area and a Building Envelope, all as shown on Exhibit A-1 and A-2.

RESTRICTED AREA: shall mean the portion of the Premises shown as "Restricted" in Exhibit A-1 and A-2.

BUILDING ENVELOPE: shall mean that portion of the Premises described as an approximately 4,511 square-foot area, as shown on Exhibit A-2.

The terms of this Conservation Restriction are as follows:

A. Prohibited Uses. Except as to reserved rights set forth in Section B. below, the Grantor will not perform or permit the following acts or uses in, on, over or under the Premises:

1. Construction or placing or allowing to remain any temporary or permanent building, structure, facility or improvement on, over or under the Premises, including but not limited to any dwelling unit or habitable living space, tennis court, landing strip or helipad, mobile home, boats, swimming pool, active recreational facility, outdoor decorative spotlighting, parking area, fence, shed or storage box, gazebo, utilities, fuel storage tank, wells, asphalt or concrete pavement, antenna, satellite receiving dish, tower, windmill, sewage or septage disposal system, or other temporary or permanent structure or facility, or improvements of any kind on, under or above the Premises;

2. Construction of any roads, maintained trails or paths, or the clearing of vegetation, or the addition, removal or movement of soil for such purpose;

3. Mining, excavating, or removing soil, loam, peat, gravel, sand, rock or other mineral resource or natural deposit;

4. Placing, filling, storing or dumping soil, refuse, trash, vehicle bodies or parts, boats, trailers, rubbish, debris, junk, wood chips, tree cuttings, waste or other substance or material whatsoever;

5. Creation of a cultivated (i.e., seeded, fertilized, and maintained) lawn or formal or cultivated gardens; application or use of fertilizers, fungicides, herbicides or pesticides in any quantity;

6. Any commercial recreation, aquaculture or agricultural or industrial use; any animal husbandry or horse paddocking or stables, paddocks, grazing areas or other enclosures, and the storage or dumping of manure or other animal wastes;

7. Cutting, removing or otherwise destroying grasses or other vegetation;

8. Activities detrimental to drainage, water or soil conservation, erosion control or the quality of surface or ground water; any removal of soil off-site;

9. The use, parking or storage of motorized trail bikes, all-terrain vehicles, snowmobiles, or any motorized vehicle except as necessary for emergency police and fire vehicles in pursuit of official duties;

10. Conveyance of a part or portion of the Premises alone, or division or subdivision of the Premises (as compared to conveyance of the Premises in its entirety which shall be permitted);

11. Any other use of the Premises or activity thereon which is inconsistent with the purposes of this Conservation Restriction or which would materially impair other significant conservation values unless necessary for the protection of the conservation values that are the subject of this Conservation Restriction; and,

12. Except as provided in Section B, all development rights in the Premises are terminated and extinguished by this Conservation Restriction; and the Premises may not be used for the purpose of calculating the amount of Grantor's or any other land available for additional subdivision or calculating the building requirements on this or any other land owned by the Grantor or any other person.

B. Reserved Rights. Notwithstanding the provisions of Section A above, the following uses and activities are permitted, but only if such uses and activities do not materially impair the conservation values or purposes of this Conservation Restriction, subject to any limitations noted below:

1. Building Envelope: The Building Envelope, as defined in Exhibit A and shown in Exhibit A-1 and A-2, attached hereto and to be recorded herewith, encompasses approximately 4,511 square feet and is only a portion of the Premises. In addition to any other rights described in this Section B, Grantor may perform or permit the following acts or uses within said Building Envelope, except as limited hereinbelow:

    a. Grantor has the right to use the area within the Building Envelope only for an art studio and/or residence and related purposes for a person and his or her family or associates engaged in the fields or art or environmental protection as their primary source of income, as permitted under applicable land use regulations, including but not limited to the right to use, maintain, renovate, reconstruct, replace, or reconfigure the existing approximately 636 square-foot studio building with attached 180 square foot deck; provided, however, the size and height of said studio building whether now existing or as it may be renovated, reconstructed, replaced, or reconfigured, can be no greater than its present footprint (i.e., the land area defined by the exterior walls at grade level) and its present height, as measured from the foundation of the existing structure, as shown on the Town of Truro Assessor's Field Card (herein "field card"), attached hereto as Exhibit A-2; and further provided that any construction work, including temporary placement of excavated fill, must be conducted without intrusion beyond the Building Envelope;

    b. With approval of the Grantee, not to be unreasonably withheld, Grantor has the right to improve the structure and utilities to comply with then-existing health and safety regulations, as determined by local officials, within the Building Envelope;

    c. In the event of a new or expanded building or structure being constructed under the provisions of this Section B.1, Grantor agrees (i) to submit to the Grantee sufficient plans and other materials necessary for the Grantee to make an informed judgment as to the location and size of the building or structure within the parameters given in this Section B. 1., and (ii) to remove any existing studio prior to commencing construction of its replacement structure;

2. Installation of temporary and permanent boundary monuments delineating the Premises and the Building Envelope; and erection and maintenance of small signs with respect to hunting, trespass, identity of Grantor and Grantee, the protected conservation values, and similar signs, so long as such signage is consistent with the purposes of this Conservation Restriction;

3. Erection and maintenance of open-faced fences, such as wooden split rail, for Premises boundary delineation and for delineation of the Building Envelope, so long as the dimensions and design of the property boundary delineation fences do not impede free wildlife passage;

4. In accordance with best silvicultural management practices, the control and removal of invasive plant species in a manner designed to affect the targeted species and to avoid damage to the non-target species and water quality including controlling poison ivy

and other potentially hurtful plant life and other species that threaten indigenous or protected species anywhere within the Premises, including use of spot-applied herbicides, fungicides and pesticides, so long as surrounding vegetation is not materially disturbed;

5. The cutting of live timber only as follows: as necessary to control or prevent an identified disease, infestation or other hazard to the health of the trees, for storm clean-up, for safety reasons to prevent injury to persons or damage to property, and for trail maintenance;

6. In conjunction with Sections B. 4 and 5, storing timber or vegetative debris originating on the Premises;

7. Use and maintenance of the existing dirt drive in its present location and in an unpaved, pervious condition, both in and beyond the Building Envelope;

8. Use, maintenance, repair, and replacement of existing utility lines, overhead or underground, to serve the studio located within the Building Envelope; to the extent practicable, location of said lines shall not disturb extensive areas of vegetation;

9. The right to mow and maintain an uncultivated yard serving the studio/residence, so long as said yard is not maintained with fertilizers or chemical applications and is not mowed within 100 feet of the edge of any wetland on-site or off-site;

10. The right, in consultation with the Grantee, whose approval shall not be unreasonably withheld, to install and maintain a new well and/or septic system beyond the Building Envelope to serve the existing dwelling;

11. The right and obligation to remove any existing structures and their contents and any associated debris from the Restricted Area beyond the Building Envelope no later than six (6) months from the recording date of this Conservation Restriction;

12. Conveying the Premises in its entirety; and,

13. Any work undertaken in conjunction with the reserved rights mentioned above in this Section B. shall seek to minimize disturbance within the Premises. Upon completion of any site work performed in conjunction with this Section B., any disturbed areas shall be restored substantially to match the conditions with respect to soil material, grade, and vegetated ground cover that existed prior to said work.

The exercise of any right or obligation reserved by the Grantor under this Section B shall be in compliance with all permitting requirements, the then-current Zoning By-Laws of the Town of Sandwich, and all other applicable federal, state and local law. The inclusion of any reserved right in this Section B requiring a permit from a public agency does not imply that the Grantee or the Commonwealth takes any position on whether such permit should be issued.

C. Notice and Approval. Whenever notice to or approval by the Grantee is required under the

provisions herein, the Grantor shall notify the Grantee in writing not less than sixty (60) days prior to the date the Grantor intends to undertake the activity in question. The notice shall describe the nature, scope, design, location, timetable and any other material aspect of the proposed activity in sufficient detail to permit the Grantee to make an informed judgment as to its consistency with the purposes and performance standards of this Conservation Restriction. Where the Grantee's approval is required, the Grantee shall grant or withhold its approval in writing within sixty days (60) days of receipt of the Grantor's written request therefore. Failure of Grantee to deliver a written response to Grantor in accordance with the prescribed timeframe shall be deemed to constitute written approval by Grantee of any request submitted for approval that is not contrary to the express restrictions hereof and that will not materially impair the purposes of this Conservation Restriction, provided that Grantor's request sets forth in substance the provisions of this section relating to deemed approval after the passage of time.

D. Extinguishment. If circumstances arise in the future such as to render the purpose of this Conservation Restriction impossible to accomplish, this Conservation Restriction can only be terminated or extinguished, whether in whole or in part, by judicial proceedings in a court of competent jurisdiction, after review and approval by the Massachusetts Secretary of Energy and Environmental Affairs. If any change in conditions ever gives rise to extinguishment or other release of the Conservation Restriction under applicable law, then the Grantee, on a subsequent sale, exchange or involuntary conversion of the Premises, shall be entitled to a portion of the proceeds in accordance with Section D.1. below, subject, however, to any applicable law that expressly provides for a different disposition of the proceeds or to the terms of any gift, grant, or funding requirements. The Grantee shall use its share of the proceeds in a manner consistent with the conservation purposes set forth herein.

D.1. Proceeds. The Grantor and the Grantee agree that donation of this Conservation Restriction gives rise to a real property right, immediately vested in the Grantee, with a fair market value that is equal to ten (10%) of the fair market value. For the purposes of this Section, said proportionate value shall remain constant.

D.2. Grantor/Grantee Cooperation Regarding Public Action. Whenever all or part of the Premises or any interest therein is taken by public authority under power of eminent domain or other act of public authority, then the Grantor and the Grantee shall cooperate in recovering the full value of all direct and consequential damages resulting from such action. All related expenses incurred by the Grantor and the Grantee under this Section shall first be paid out of any recovered proceeds, and the remaining proceeds shall be distributed between the Grantor and the Grantee in shares equal to such proportionate value, as noted in Section D.1, above, subject to the terms of any gift, grant or funding requirements. The Grantee shall use its share of the proceeds in a manner consistent with the purposes of this grant.

E. Access. The Conservation Restriction hereby conveyed does not grant to the Grantee, to the public generally, or to any other person any right to enter upon the Premises, except the Grantee and its representatives are granted the right to enter the Premises:

1. after reasonable notification, at reasonable times and in a reasonable manner for the purpose of inspecting the same to determine compliance with the provisions of this Conservation Restriction; and

2. (b) after thirty (30) days prior written notice, to take any and all actions with respect to the Premises as may be necessary or appropriate, with or without order of court, to remedy, abate or enforce any violation hereof unless the Grantor has prior to the expiration of said thirty (30) days given written notice to the Grantee reasonably addressing all alleged violations and setting forth a reasonable plan to remedy any such alleged violation and has made reasonable efforts to cease the activity or to begin remediation; and,

F. Legal Remedies of the Grantee. The rights hereby granted shall include the right to enforce this Conservation Restriction by appropriate legal proceedings and to obtain injunctive and other equitable relief against any violations, including without limitation relief requiring restoration of the Premises to its condition at the time of this grant (it being agreed that the Grantee shall have no adequate remedy at law), and shall be in addition to, and not in limitation of, any other rights and remedies available to the Grantee. Prior to instituting litigation to enforce any violations of this Conservation Restriction, however, the Grantee shall first notify the Grantor and request the Grantor to remedy the violation; if the violation is not remedied within sixty (60) days, then the parties shall make a good faith effort to mediate the dispute before litigation is commenced, provided the Grantor has ceased the violative activity and is making good faith efforts to remedy the violation.

Grantee shall not, however, have the right to bring an action against Grantor with respect to a violation of this Conservation Restriction by trespassers or other third persons whose entry on the Property is not authorized or voluntarily acquiesced in by Grantor; Grantor agrees that Grantor will not voluntarily acquiesce in any violation of this Conservation Restriction by trespassers or such other third persons; and Grantor further agrees that, at the request of Grantee, Grantor will make reasonable efforts to deter such activities and to remedy the violation and will cooperate with Grantee to enforce this Conservation Restriction against trespassers and such other third persons.

In the event of a dispute over the boundaries of the Premises, the Grantor shall pay for a survey and permanent boundary markers delineating the Premises.

The Grantor, its successors and assigns, agree to reimburse the Grantee for all reasonable costs and expenses (including without limitation reasonable attorney's fees) incurred in enforcing this Conservation Restriction or in taking reasonable measures to remedy or abate any violation thereof.

The Grantor, its successors and assigns shall each be liable under this Section for only such violations of this Conservation Restriction as may exist during its respective periods of ownership of the Premises, and any new owner may be held responsible for any violations existing during his or her ownership.

By its acceptance, the Grantee does not undertake any liability or obligation relating to the condition of the Premises, including with respect to compliance with hazardous materials or other environmental laws and regulations, or for acts not caused by the Grantee or its agents.

Enforcement of the terms of this Conservation Restriction shall be at the discretion of the

Grantee, and any election by the Grantee as to the manner and timing of its right to enforce this Conservation Restriction or otherwise exercise its rights hereunder shall not be deemed or construed to be a waiver of such rights.

G. Acts Beyond Grantor's Control. Nothing contained in this Conservation Restriction shall be construed to entitle the Grantee to bring any action against the Grantor, for any injury to or change in the Premises resulting from causes beyond the Grantor's control, including, but not limited to, fire, flood, storm, natural erosion, or from any prudent action taken by the Grantor, under emergency conditions to prevent, abate, or mitigate significant injury to the Premises resulting from such causes. Grantor and Grantee agree that in the event of damage to the Property from acts beyond Grantor's control, that if Grantor and Grantee mutually agree that it is desirable that the Property be restored, Grantor and Grantee will cooperate in attempting to restore the Property if feasible. Notwithstanding the foregoing, nothing herein shall preclude Grantor's and Grantee's rights to pursue any third party for damages to the Premises from vandalism, trespass, or any other violation of the terms of this Conservation Restriction.

H. Duration and Assignability. The burdens of this Conservation Restriction shall run with the Premises in PERPETUITY and shall be enforceable against the Grantor, its successors and assigns holding any interest in the Premises. The Grantee is authorized to record or file any notices or instruments appropriate to assuring the perpetual enforceability of this Conservation Restriction; and the Grantor on behalf of its successors and assigns, appoints the Grantee as its attorney-in-fact to execute, acknowledge and deliver any such instruments on its behalf. Without limiting the foregoing, the Grantor and its successors and assigns agree themselves to execute any such instrument upon request.

The benefits of this Conservation Restriction shall run to the Grantee, shall be in gross and shall not be assignable by the Grantee, except in the following instances from time to time:

1. as a condition of any assignment, the Grantee requires that the purpose of this Conservation Restriction continue to be carried out,
2. the assignee, at the time of assignment, qualifies under Section 170(h) of the Internal Revenue Code of 1986, as amended, and applicable regulations thereunder, and under Section 32 of Chapter 184 of the General Laws as a donee eligible to receive this Conservation Restriction directly; and,
3. the Grantee complies with the provisions required by Article 97 of the amendments to the Constitution of the Commonwealth of Massachusetts, if applicable.

I. Subsequent Transfers. The Grantor agrees to incorporate by reference the terms of this Conservation Restriction in any deed or other recordable legal instrument by which Grantor conveys any interest in all or a portion of the Premises, including, without limitation, a leasehold interest. Grantor further agrees to give written notice to the Grantee of the transfer of any interest at least twenty (20) days prior to the date of such transfer. Failure of the Grantor to do either shall not impair the validity of this Conservation Restriction or limit its enforceability in any way.

J. Termination of Rights and Obligations. Notwithstanding anything to the contrary contained

herein, the rights and obligations under this Conservation Restriction of any party holding an interest in the Premises terminate upon transfer of that party's interest, except that liability for acts or omissions occurring prior to the transfer, and liability for the transfer itself if the transfer is a violation of this Conservation Restriction, shall survive the transfer.

K. Estoppel Certificates. Upon request by the Grantor, the Grantee shall, upon twenty (20) days notice, execute and deliver to the Grantor any document, including an estoppel certificate, which certifies the Grantor's compliance with any obligation of the Grantor contained in this Conservation Restriction, and which otherwise evidences the status of this Conservation Restriction as may be requested by the Grantor.

L. Amendment. If circumstances arise under which an amendment to or modification of this CR would be appropriate, Grantor and the Grantee may by mutual consent amend in writing the applicable term or provision hereof provided that the amendment complies with the applicable requirements of Article 97 of the Amendments to the Constitution of the Commonwealth of Massachusetts, Massachusetts General Law, Ch. 184, sec. 31-33, or any successors thereto, and provided that any such amendment, together with any approvals necessary to its effectiveness, including that of the Massachusetts Secretary of Energy and Environmental Affairs, shall be recorded with the Barnstable County Registry of Deeds. Any amendment shall be consistent with the purposes of this Conservation Restriction, shall not diminish the conservation values of the Premises and shall not affect its perpetual duration.
In addition, the Grantee shall not consider any amendment to this Conservation Restriction UNLESS all of the following conditions are met:

1. The minimum amount of amendment, as to terms, land area or structural dimensions, activity, or level of use, is proposed to accommodate the proposal;
2. Whenever possible, mitigation measures of like kind be proposed and the substitution be more advantageous to the cause of conservation;
3. There will be a net gain to conservation values offered through mitigation to the affected parcel or its immediate vicinity; and,
4. Cash values of items or areas proposed for release, amendment or mitigation may be disregarded by Grantee in the equation to determine net gain to conservation values; and
5. The then-Grantor agrees to pay all costs involved in the amendment process.

M. Non-Merger: The parties intend that the doctrine of merger shall not apply to this conveyance, and that no transfer of Grantor's or Grantee's interest in the Premises and no acquisition of any additional interest in the Premises by Grantor or Grantee shall cause this Conservation Restriction to merge with the fee or have the effect of causing any of the terms hereof to be rendered unenforceable by reason of the so-called doctrine of merger. No deed shall be effective until this Conservation Restriction has been assigned to a non-fee owner or other action taken to avoid a merger and preserve the terms and enforceability of this Conservation Restriction by a non-fee owner. It is the intent of the parties that the Premises will be subject to the terms of this Conservation Restriction in perpetuity.

N. Miscellaneous Provisions

1. Controlling Law. The interpretation and performance of this Conservation Restriction shall be governed by the laws of the Commonwealth of Massachusetts.

2. Construction. Any general rule of construction to the contrary notwithstanding, this Conservation Restriction shall be liberally construed in favor of its purposes. If any provision in this instrument is found to be ambiguous, an interpretation consistent with the purposes of this Conservation Restriction that would render the provision valid shall be favored over any interpretation that would render it invalid.

3. Severability. If any provision of this Conservation Restriction shall to any extent be held invalid, the remainder shall not be affected.

4. Entire Agreement. This obligation sets forth the entire agreement of the parties with respect to the Conservation Restriction and supersedes all prior discussions, negotiations, understandings, or agreements relating to the Conservation Restriction, all of which are merged herein.

5. Joint Obligation. The obligations imposed by this Conservation Restriction upon the parties that together comprise "Grantor" shall be joint and several.

6. Captions. The captions in this instrument have been inserted solely for convenience of reference and are not a part of this instrument and shall have no effect upon construction or interpretation.

O. Effective Date. Grantor and Grantee intend that the restrictions arising hereunder take effect on the day and year this Conservation Restriction is recorded in the official records of the Barnstable County Registry of Deeds, after all signatures required by Section 32, Chapter 184 of the General Laws of Massachusetts have been affixed hereto. This document shall be recorded in a timely manner upon execution by all parties.

No documentary stamps are required as this Conservation Restriction is a gift. This conveyance does not represent all or substantially all of the assets of the corporation.

Attached hereto and incorporated herein are the following:
Signatures:

Grantor – Truro Center for the Arts at Castle Hill, Inc.
Grantee -- Truro Conservation Trust
Town of Truro Board of Selectmen
Secretary, MA Executive Office of Energy and Environmental Affairs

Exhibits:

A. Legal Description of the Premises
A-1. CR Sketch Plan
A-2. Building Envelope Sketch Plan

GRANTOR:
At a meeting duly held on _____, 2016, the
Truro Center for the Arts at Castle Hill, Inc., voted to grant the foregoing Conservation Restriction to the Truro Conservation Trust.

Truro Center for the Arts at Castle Hill, Inc.

_____
President

_____
Treasurer

COMMONWEALTH OF MASSACHUSETTS

Barnstable, ss. _____, 2016

Then personally appeared the above-named _____, President, and _____, Treasurer, of Truro Center for the Arts, Inc., the corporation named in the foregoing instrument, and proved to me through satisfactory evidence of identification, which was personal knowledge of identity, to be the persons whose names are signed on the document and acknowledged they are duly authorized to act on behalf of said corporation, the seal affixed to said instrument is the corporate seal of said corporation, and foregoing instrument to be the free act and deed of the corporation, before me.

_____
Notary Public:
My commission expires:

Grantee:

Truro Conservation Trust

At a meeting duly held on _____, 2016, the **Trustees of Truro Conservation Trust,** voted to accept the foregoing Conservation Restriction from the Truro Center for the Arts, Inc.

By: _____
Chairman/Trustee, but not individually

By: _____
Trustee, but not individually

By: _____
Trustee, but not individually

By: _____
Trustee, but not individually

By: _____
Trustee, but not individually

By: _____
Trustee, but not individually

By: _____
Trustee, but not individually

By: _____
Trustee, but not individually

By: _____
Trustee, but not individually

By: _____
Trustee, but not individually

By: _____
Trustee, but not individually

By: _____
Trustee, but not individually

COMMONWEALTH OF MASSACHUSETTS

Barnstable, ss. _____, 2016

Then personally appeared the above-named Alfred Gaechter, the person whose name is signed on the document and proved to me through satisfactory evidence of identification, which was personal knowledge of identity, and who being by me duly sworn did say that he is the Chairman/Trustee of the Truro Conservation Trust and acknowledged the foregoing instrument to be his free act and deed on behalf of the Trustees of the Truro Conservation Trust, before me.

_____
Mark H. Robinson, Notary Public
My commission expires: 24 July 2020

APPROVAL OF SELECTMEN

At a public meeting duly held on _____, 2016, the Selectmen of the Town of Truro, Massachusetts voted to approve, pursuant to M.G.L. Chapter 184, Section 32, the foregoing Conservation Restriction to The Compact of Cape Cod Conservation Trusts, Inc.

TOWN OF TRURO
BOARD OF SELECTMEN

_____ _____

_____ _____

_____

COMMONWEALTH OF MASSACHUSETTS

Barnstable, ss. _____, 2016.

Then personally appeared the above-named _____, Chairman of the Town of Truro Board of Selectmen, and proved to me through satisfactory evidence of identification, which was personal knowledge of identity, to be the person whose name is signed on the document and acknowledged the foregoing instrument to be his/her free act and deed on behalf of said Town of Truro Board of Selectmen, before me.

_____
Notary Public
My commission expires:

APPROVAL BY SECRETARY OF ENERGY AND ENVIRONMENTAL AFFAIRS
COMMONWEALTH OF MASSACHUSETTS

The undersigned, Secretary of the Executive Office of Energy and Environmental Affairs of the Commonwealth of Massachusetts, hereby certifies that the foregoing Conservation Restriction to The Compact of Cape Cod Conservation Trusts, Inc. has been approved in the public interest pursuant to M.G.L. Chapter 184, Section 32. Said approval is not to be construed as representing the existence or non-existence of any pre-existing rights of the public, if any, in and to the Premises, and any such pre-existing rights of the public, if any, are not affected by the granting of this Conservation Restriction.

Date: _____, 2016. _____

Matthew A. Beaton, Secretary
Executive Office of Energy and
Environmental Affairs

COMMONWEALTH OF MASSACHUSETTS

Suffolk, ss. _____, 2016.

Then personally appeared the above-named Matthew A. Beaton, Secretary, Executive Office of Energy and Environmental Affairs, and proved to me through satisfactory evidence of identification, which was personal knowledge of identity, to be the person whose name is signed on the document and acknowledged to me that he signed it voluntarily as Secretary of Energy and Environmental Affairs for the Commonwealth of Massachusetts, for its stated purpose.

_____

Notary Public
My commission expires:

CONSERVATION RESTRICTION
on Land owned by
Truro Center for the Arts at Castle Hill, Inc.
in Truro, Massachusetts

EXHIBIT A
Description of the Premises

The tract of land which is subject to this Conservation Restriction, including the Building Envelope and Restricted Area, (the "Premises") is more particularly described as follows:

All of the land and buildings on a parcel of land totaling 39,650 s.f.+/- (0.91 acre) as shown on a plan of land entitled, "Plan of Land –North-Truro, Mass. Property of Joyce Johnson, Scale I inch = 50 feet, September 1966, Whitney & Bassett-Architects & Engineers, Hyannis, Mass.," and recorded in the Barnstable County Registry of Deeds in Plan Book 217 Page 5. See Exhibit A-1 for sketch of the lot under Conservation Restriction.

Within the Premises is a Building Envelope totaling 4,511 s.f. +/- to which certain limitations apply, according to the provisions of this Conservation Restriction in Section B. Said Building Envelope is shown on a sketch of land entitled, "Sketch of Building Envelope for Conservation Restriction in Truro made for Estate of Joyce Johnson, Scale: 1" = 40', April 20, 2016, Slade Associates, Inc., Registered Land Surveyors, 10 Pine Point Road, Wellfleet MA 02667." See Exhibit A-2 for sketch of the Building Envelope's dimensions.

For our title, see deed from _____, Executor of the Estate of Joyce Johnson (BA Probate #_____) recorded herewith in the Barnstable County Registry of Deeds in Book ____ Page ____.

Street Address: 15 Cabral Farm Road, Truro MA

EXHIBIT A-1
SKETCH OF THE PREMISES

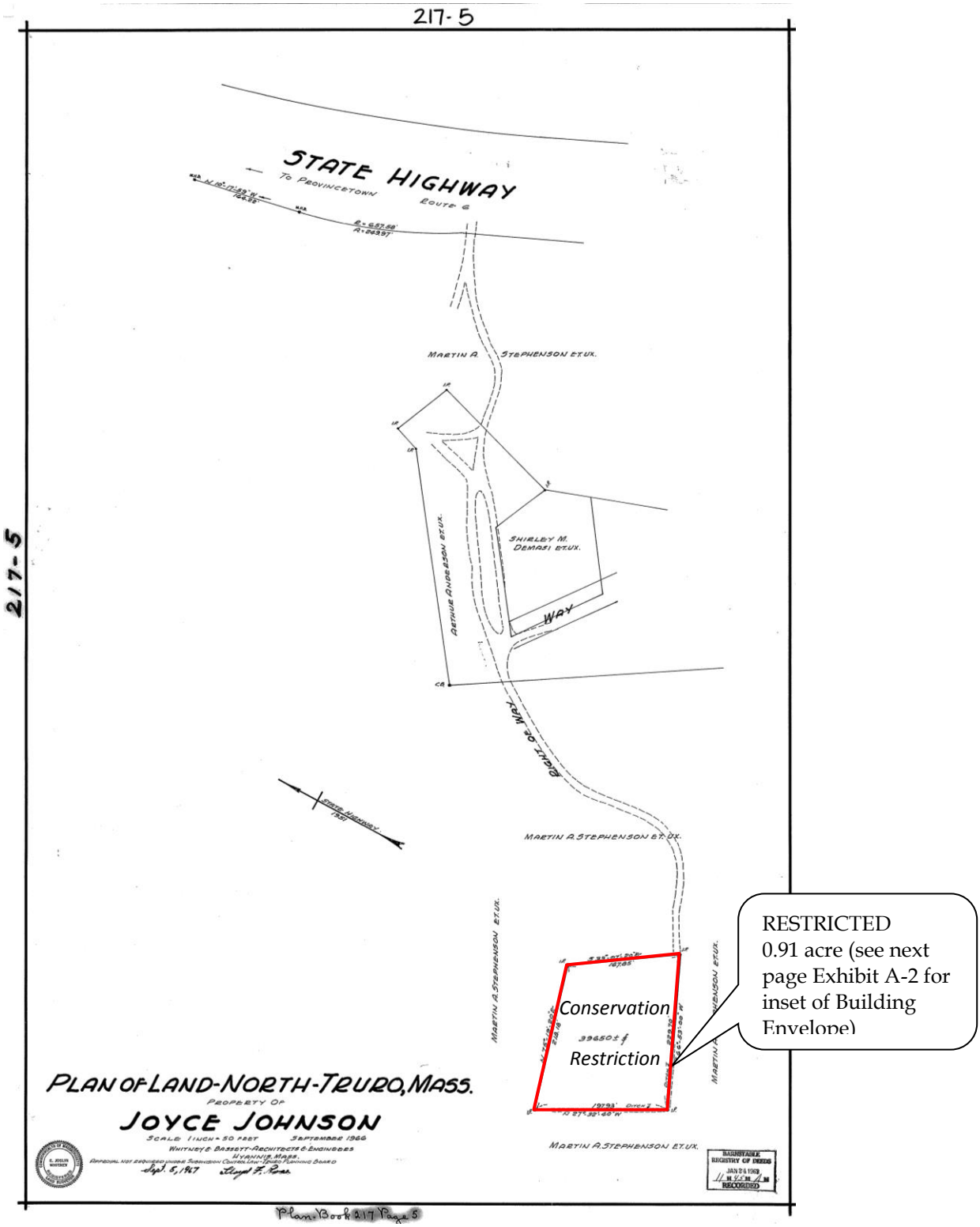

EXHIBIT A-2
SKETCH OF THE BUILDING ENVELOPE

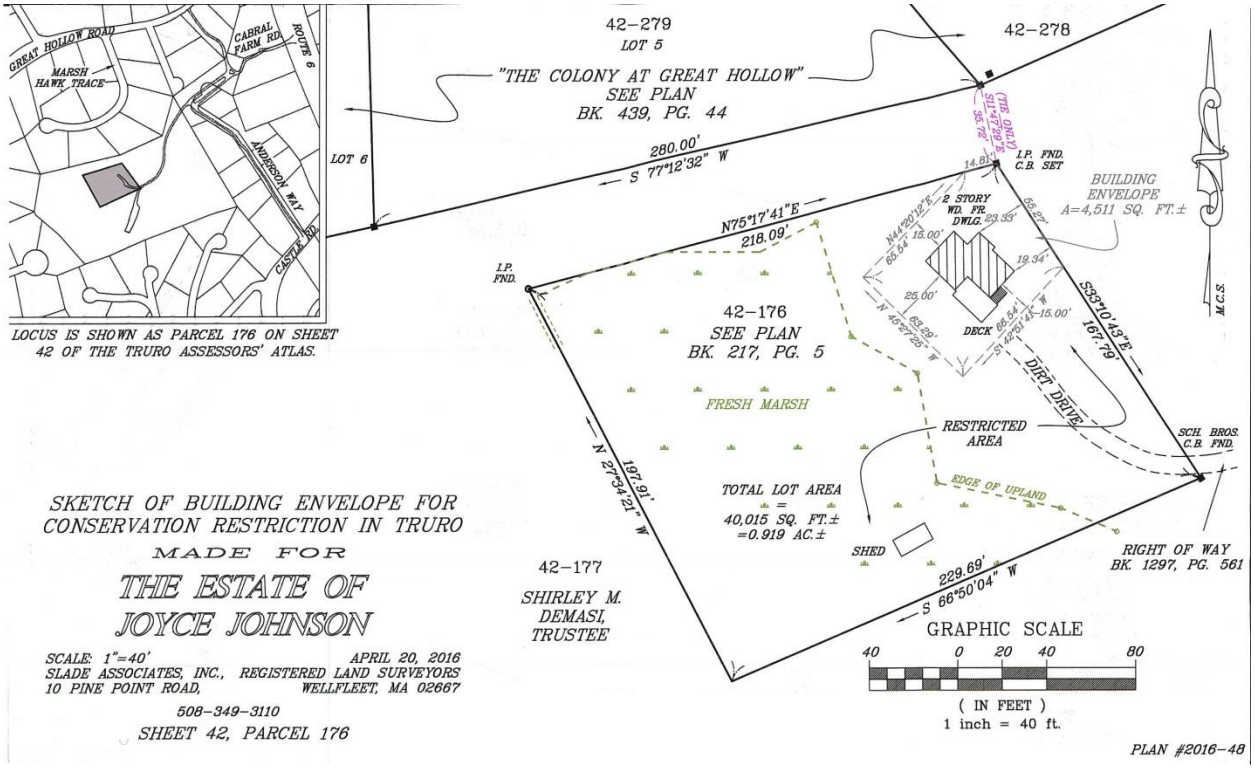

Agenda Item: 5C3

RECEIVED
SELECTMENS OFFICE
AUG 1 0 2016
TOWN OF TRURO
MASSACHUSETTS

THE COMPACT

OF CAPE COD CONSERVATION TRUSTS, INC.

8 August 2016

Ms. Nicole Tudor
Administrator's Office
Town of Truro
P.O. Box 2030
Truro MA 02566

RE: Conservation Restriction
North Pamet Road, Truro (McArdle)

Dear Ms. Tudor:

On behalf of the McArdle family and the Truro Conservation Trust, please find enclosed a final copy of this conservation restriction (CR) for the Selectmen's approval. As you know, this approval is necessary so that the CR can be recorded in perpetuity. Please let me know if the Selectmen can add this to their agenda for their vote on September 13.

We believe that this Conservation Restriction will ensure that the magnificent Pamet River, Truro's unique scenic and natural asset, will be preserved at this strategic corner of the Valley.

Thank you for your assistance.

Sincerely,

Mark H. Robinson
Executive Director
Enc.

cc: McArdle; TCT (Gaechter)

694-7415 [redacted], P.O. Box 443, Barnstable MA 02630
Tel (508) [redacted] [redacted] *email* mark@thecompact.net www.thecompact.net

Grantor: Richard F.X. McArdle and Sonia F. McArdle
Grantee: Truro Conservation Trust
Property Address: 15 North Pamet Road, Truro MA
Grantor's Title: Book 25616 Page 96 in Barnstable County Registry of Deeds.

CONSERVATION RESTRICTION

RICHARD F.X. McARDLE and SONIA F. McARDLE, husband and wife, as tenants by the entirety, both of 1511 North Astor Street, Chicago IL 60610, their successors and assigns holding any interest in the Premises as hereinafter defined, (hereinafter "Grantor"), as a gift, for no consideration, grant to Robert Bednarek, Alfred Gaechter, Carol Green, Marston D. Hodgin, Philip G. Smith, Valerie Falk, Thomas Bow, William C. Worthington, Amanda Reed, Irma Ruckstuhl, Meg Royka, Brian Boyle and Susan Travers, as **TRUSTEES of the TRURO CONSERVATION TRUST**, established under a Declaration of Trust dated November 30, 1981, and recorded at the Barnstable County Registry of Deeds in Book 3428, Page 196, as amended, with a mailing address of P.O. Box 327, North Truro MA 02652, its successors and permitted assigns ("Grantee"), with quitclaim covenants, **IN PERPETUITY** and exclusively for conservation purposes, the following described **CONSERVATION RESTRICTION** (the "Restriction"), on a tract of unregistered upland totaling approximately 11.16 acres, located in the Town of Truro, County of Barnstable, Commonwealth of Massachusetts, said tract being described in Exhibit A and shown on Exhibit A-1, both of which are attached hereto, said parcel hereinafter referred to as the "Premises."

Purpose. This Restriction is defined in and authorized by Article 97 of the Amendments to the Constitution of the Commonwealth of Massachusetts, as amended, acts in amendment thereof or in addition thereto, and Sections 31-33 of Chapter 184 of the General Laws of Massachusetts. Its purpose is to assure that, while permitting the acts and uses described in Section B herein, the Premises will be retained in perpetuity substantially in its natural, scenic and open condition for the protection of its natural resources, plants, wildlife, natural habitat and open space; and, to protect the heathland habitat on the Premises. The conservation of the Premises will yield a significant public benefit because the Premises' protection will advance the following policies and objectives:

WHEREAS, in 1978 the National Park Service (NPS) of the United States Department of the Interior approved a "Statement for Management for Cape Cod National Seashore," in which the following management objective was approved: "to assure perpetuation and compatible use of Seashore resources through cooperative regional planning and management with local communities and other government agencies to achieve environmentally compatible development and use of non-federal lands inside and outside the Seashore boundary (p.36); and, in 1990 the NPS recommended a revised "Statement for Management" which identified a major management issue as being, "The

protection of Seashore resources from adverse effects of adjacent private and municipal developments (p.37); and

WHEREAS, in 1989 the NPS, in cooperation with the University of Massachusetts, published a report entitled, "Managing Adjacent Areas: Predictive Model for Land Use Changes, Cape Cod National Seashore Case Study," which found that

a) "…two-thirds of the 350 National Parks are being negatively impacted by adjacent land uses…[p.vi]" and, "Development of adjacent areas and other lands more removed from the national Seashore has negative impacts on the Seashore [p.1]"; and,
b) "As land adjacent to National Parks is developed the potential for contamination of groundwater within park boundaries increases [p.11]"; and,
c) "…conservation easements would be useful to the NPS. These easements would protect visual amenities and other physical features of the park lands [p.57];" and,

WHEREAS, in 1978, pursuant to M.G.L. Ch. 21, sec. 17B (the Massachusetts Scenic and Recreational Rivers Act), the Department of Environmental Management (DEM) classified the Pamet River in Truro as a Scenic River; and,

WHEREAS, in 1987, the Pamet River Greenway Management Plan ("Management Plan") was developed to, among other things, protect the unique features and quality of the Pamet and to promote appropriate recreational use of the river, and which stated goals included, among other things, to protect the water quality, including adjacent ground water, of the river system, and to preserve scenic views and the integrity of the Pamet as an historic coastal village; and,

WHEREAS, in 1988, upon acceptance of the goals and objectives of the Management Plan, DEM officially designated the Pamet River as a Local Scenic River; and,

WHEREAS, in 1981, the Massachusetts DEM identified about five percent of the Massachusetts landscape as being a "Noteworthy Scenic Landscape," its second highest designation under the Scenic Landscape Inventory; and,

WHEREAS, in 1988 the Center for Coastal Studies (Provincetown MA), under contract to the Massachusetts Natural Heritage and Endangered Species Program, conducted an analysis of open canopy uplands on Cape Cod, entitled, "Survey of Sandplain Grasslands and Heathlands on Cape Cod," (LeBlond, 1988), in which he found an interesting intermix of these rare coastal habitats, especially in Truro; and,

WHEREAS, The Massachusetts Endangered Species Act, M.G.L. c. 131A protects rare species and their habitats, and the Massachusetts Natural Heritage and Endangered Species Program ("Mass. NHESP") has designated as *Priority Habitats* the known geographical extent of habitat for state-listed rare plant and animal species; and,

WHEREAS, in 2010, the Massachusetts Department of Fish and Game and The Nature Conservancy's Massachusetts Program published a report entitled *BioMap2: Preserving the Diversity of Massachusetts in a Changing World*, which identified Core Habitat areas "critical for the long-term persistence of rare species and other Species of Conservation Concern, as well

as a wide diversity of natural communities and intact ecosystems across the Commonwealth;" and identified Core Habitat areas, being of utmost priority to protect across the state; and,

WHEREAS, in 2003, the Mass. NHESP produced its report entitled, *Living Waters: Guiding the Protection of Freshwater Diversity in Massachusetts*, which identified the most significant "water bodies that contain rare species and exemplary habitats [Core Habitats]" and also identified the "upland and upstream areas that have the greatest influence on species living in Core Habitats [Critical Supporting Watershed]"; and,

WHEREAS, in July 1991 the Barnstable Assembly of Delegates, pursuant to the Cape Cod Commission Act (Chapter 716 of the Acts of 1989), adopted a *Regional Policy Plan*, amended in 1996, 2002 and 2009, which provided, *inter alia* (references are to the 2009 Plan):

- a Wildlife and Plant Habitat Goal to "prevent loss or degradation of critical wildlife and plant habitat…and to maintain existing populations and species diversity" (WPH1), stating that "renewed commitment to protect the most ecologically sensitive undeveloped lands through land acquisition and other permanent conservation measures is also warranted;"
- a Wetlands Goal to "preserve and restore the quality and quantity of inland and coastal wetlands on Cape Cod," and,
- an Open Space and Recreation Goal to "preserve and enhance the availability of open space that provides wildlife habitat…and protects the region's natural resources and character" (OS1) with a recommended Town Action of working with "local land conservation organizations to identify, acquire by fee simple or conservation restriction, and manage open space to meet projected community needs;" and,

WHEREAS, at its 2005 Annual Town Meeting, the Town of Truro adopted a *Local Comprehensive Plan*, which stated goals included, among other things:

- a Wetland and Wildlife Goal to "take measures to prevent loss or degradation of critical wildlife and plant habitat…, and maintain, in so far as possible, existing populations and species diversity;"
- an Open Space and Recreation Goal to "preserve and enhance the availability of open space in order to provide wildlife habitat, recreation opportunities, and protect the natural resources, scenery, and character of Truro," with a policy of protecting as much as possible significant natural and fragile areas including significant scenic views, scenic roads and land forms, and a strategy of working with other public and private organizations to purchase private property to provide protection for sensitive areas and historic and visual areas; and,
- Identified North and South Pamet Roads as Scenic Roadways (p. 138);
- Identified the Pamet Roads area as worthy of an Historic District (p. 130-131);
- Identified the Pamet River as "the ecological heart of Truro, holding most of the town's wetlands and its greatest concentration of biological diversity;" (p. 7)

WHEREAS, in 2009, the Town of Truro developed an *Open Space and Recreation Plan* establishing goals that "preserve environmental resources for human use while protecting fragile habitats and natural communities and allowing for passive human enjoyment of the environment," and which identified, among others, the following specific goals:

- Preserve and enhance the availability of open space in order to provide wildlife habitat, recreation opportunities, and protect the natural resources, scenery, and character of Truro;

- Maintain the town's historic and rural character, including by reducing density and protecting wildlife and endangered species;
- Prevent loss or degradation of critical wildlife and plant habitat, minimize the impact of development on wildlife and plant habitat, and maintain, in so far as possible, existing populations and species diversity; and,

WHEREAS, the 2009 *Open Space and Recreation Plan* also established as one of its objectives, placing conservation restrictions on public and private open space for added protection; and,

WHEREAS, in 1999 the Town of Truro adopted a *Conservation Restriction Program*, consisting of policies and guidelines approved by the Board of Selectmen in consultation with the Open Space Committee, Conservation Commission and the Board of Assessors, which encourages the use of conservation restrictions in perpetuity as a means of protecting the environment, and which further specifies that "Lands proposed for restriction may be presumed to be in the public interest if those lands contribute to the protection of the community's natural resources as identified in the following list: (*relevant excerpts below*)

1.a.(1)	Pamet River
1.b.(5)	rare species, other wildlife
1.b.(8)	Scenic Roads, Public Views and Rural Character
1.b.(10, 11)	Floodplains; wetlands
2.b & 3.a	Pamet River recharge area
5.h	To maintain scenic views
5.k.	wildlife and habitat for both flora and fauna
6.a&b	Pamet River recharge area and ecosystem
And,	rare biological habitats - heathlands; and,
	Lands in or abutting the Cape Cod National Seashore; and,

WHEREAS, The Nature Conservancy (TNC) has identified areas considered more resilient to climate change and thus more likely to support conservation, and has mapped such areas as *Resilient Sites for Terrestrial Conservation Focal Areas*; and,

WHEREAS, preservation of the Premises satisfies each of these objectives enumerated above because the Premises:

- Contains a diversity of habitats, including a coastal bank, river, shallow marsh and shrub swamp and is partly comprised of heathland habitat, a vanishing, rare, "globally-imperiled" open habitat of Cape Cod (see Appendix H);
- lies 100% within a TNC-identified Resilient Area important for climate change adaptation (see Appendix I);
- abuts the Cape Cod National Seashore protected open space (see Appendix J);
- is wholly within an area of BioMap2 Core Habitat and Priority Habitat, as identified by the Mass. NHESP (see Appendix F); and,
- includes wetlands and floodplains of the Upper Pamet River identified by Mass. NHESP as part of the Living Waters Core Habitat and Critical Supporting Watershed (see Appendix F);
- is located wholly within the Pamet River recharge area (see Appendix M);
- protects from development more than 1,000 feet of frontage on North and South Pamet

Roads, identified by the Town as one of its most scenic roadways and worthy of a historic district;

- protects about 1,000 feet of upland frontage on the Pamet River, a State-designated Local Scenic River; provides a public scenic view of and from the Pamet River, a public navigable waterway, and a State-designated Noteworthy Scenic Landscape;
- is a substantial contributing element to the overall scenic and cultural character of the area by maintaining the land predominantly in its natural condition;
- will be protected by a perpetual conservation easement/restriction as advocated by multiple planning documents for the area; and,

WHEREAS, accordingly, the Premises possess significant open, natural, and scenic values (collectively, "conservation values") of great importance to the Grantee and the people of Truro, the Commonwealth of Massachusetts and the United States;

WHEREAS, accordingly, the Premises constitutes a significant natural area which qualifies as a "relatively natural habitat of fish, wildlife, or plants, or similar ecosystem," and protection of the Premises will meet the requirements of section 170(h)(4)(A)(ii) of the Internal Revenue Code of 1986, as amended, (the "Code"); and,

WHEREAS, accordingly, protection of the Premises will preserve open space pursuant to clearly delineated Federal, State, and local governmental policies and will yield a significant public benefit, and will therefore meet the requirements of Section 170(h)(4)(A)(iii)(II) of the Code; and,

WHEREAS, accordingly, the Premises provides for the "scenic enjoyment of the general public" from public ways and protection of the Premises will therefore meet the requirements of Section 170(h)(4)(A)(iii)(I) of the Code; and,

WHEREAS, development of the Premises would lead to or contribute to the degradation of the scenic and natural character of the area; and,

WHEREAS, the Town of Truro has in recent decades come under increasing pressure for development, and such development can destroy or otherwise severely impact the open character, natural resources, and scenic beauty of the area; and,

WHEREAS, the Grantee is a publicly-supported, tax-exempt non-profit organization whose primary purpose is to preserve and conserve natural areas for aesthetic, scientific and educational purposes; and,

WHEREAS, the Grantee has received a letter from the Internal Revenue Service, dated June 5, 1987, a copy of which is on file at the offices of the Grantee, to the effect that the Grantee is not a private foundation within the meaning of Section 509(a) of the Code; and,

WHEREAS, the Grantor intends, as owners of the Premises, to convey to the Grantee the right to preserve and protect the conservation values of the Premises in perpetuity; and,

WHEREAS, the Grantee agrees by accepting this grant to honor the intentions of the Grantor state herein and to preserve and protect in perpetuity the Conservation Values of the Premises set forth

above for the benefit of this generations and the generations to come.

NOW, THEREFORE, in consideration of the above and the mutual covenants, terms, conditions, and restrictions contained herein, the Grantor and the Grantee voluntarily agree that the CONSERVATION RESTRICTION described herein is an appropriate means to achieve multiple open space protection goals and objectives.

The terms of this Conservation Restriction are as follows:

A. Prohibited Uses. Except as to reserved rights set forth in Section B below, neither the Grantor nor its successors or assigns will perform or permit others to perform the following acts or uses, which are prohibited on, above and below the Premises:

1) Construction or placing or allowing to remain of any temporary or permanent building, structure, facility or improvement, including but not limited to any dwelling unit or habitable living space, structures related to agriculture or animal husbandry, sign, fence, billboard, or other advertising display, tennis court, landing strip, mobile home, swimming pool, asphalt or concrete pavement, antenna, tower, windmill, wind turbine, water tower, water storage tank, shed, solar array, well, septic system, road, or other structure or facility on, under or above the Premises;

2) Mining, excavating, or removing from the Premises of soil, loam, peat, gravel, sand, rock or other mineral resource or natural deposit from the Premises;

3) Placing, filling, storing or dumping on the Premises of soil, refuse, trash, vehicle bodies or parts, rubbish, debris, junk, tree cuttings generated off-site, waste or other substance or material whatsoever;

4) Cutting, removing or otherwise destroying trees, grasses or other vegetation except as needed to maintain or enhance heathland habitat and its constituent vegetation; application or use, by certified licensed applicators, of fertilizers, fungicides, herbicides or pesticides in any quantity except as needed to maintain or enhance heathland habitat and its constituent vegetation ;

5) Activities detrimental to drainage, flood control, water conservation, water quality, erosion control, soil conservation, or archaeological conservation;

6) Any animal husbandry or horse paddocking or stables, paddocks, grazing areas or enclosures and the storage or dumping of manure or other animal wastes;

7) Hunting, trapping or camping;

8) The use of the Premises for any commercial recreation, agriculture, business, residential or industrial use of the Premises; Any use inconsistent with conservation and passive recreation;

9) Use, parking or storage of vehicles including motorcycles, mopeds, all-terrain

vehicles, trail bikes, or any other motorized vehicles on the Premises except for public safety vehicles necessary in carrying out their official duties;

10) Subdivision; conveyance of a part or portion of the Premises alone, or division or subdivision of the Premises (as compared to conveyance of the Premises in its entirety which shall be permitted), and no portion of the Premises may be used towards building or development requirements on this or any other parcel, it being the intent to keep the Premises in single ownership;

11) Any other use of the Premises, which will materially impair its conservation values or purposes.

B. Reserved Rights. The Grantor reserves the right to conduct or permit the following activities and uses on the Premises, but only if such uses and activities do not materially impair the conservation values or purposes of this Restriction:

1. The right and obligation to undertake measures to enhance and promote the continuation of the coastal heathland habitat, to its current dimensions as shown in Appendix H, including but not limited to (a) removal of non-heathland trees and woody vegetation, particularly pitch pine and tree oaks, in a manner that minimizes disturbance of the soil, and (b) planting, as needed, of indigenous heathland vegetation, such as bearberry, *Hudsonia*, little blue stem, etc., provided surrounding vegetation is not substantially disturbed; and the right to remove invasive non-indigenous plant species and control poison ivy and other potentially hurtful plant life and other plant life that threatens indigenous species anywhere within the Premises;

2. The right to conduct archaeological activities, including without limitation archaeological research, surveys, excavation and artifact retrieval, but only (a) after written notification to and approval by Grantee, and (b) in accordance with an archaeological field investigation plan prepared by or on behalf of the Grantor and approved in advance of such activity, in writing, by the Massachusetts Historic Commission ("MHC") State Archaeologist as required by Massachusetts General Laws. A copy of the results of any scientific investigation on the Premises is to be provided to the Grantee. Plans for restoration of the site of any archaeological activity shall be submitted to the Grantee in advance of restoration, and such restoration shall be conducted only in accordance with a plan approved by the Grantee;

3. Activities detrimental to archeological and historic resources, including but not limited to earth moving and the alteration of historic stone walls/cellar holes/features, shall not be deemed to be detrimental to archeological and historic resources if a description of the proposed activity and its location is submitted in writing (e.g., on a Project Notification Form) with a plan of land (or assessors map) and a USGS map with the Premises outlined thereon, to MHC, and MHC issues a letter stating that the proposed activity is not within a resource area or is determined to not have an adverse effect on said resources. Grantors and Grantee shall make every reasonable effort to prohibit any person from conducting archaeological field investigation on the Premises, including metal detecting, digging, or artifact collecting, without approval of the MHC State Archaeologist (or appropriate successor official), and shall promptly report any such prohibited activity to the MHC State Archaeologist (or appropriate successor official). Grantor and Grantee shall include the prohibition against digging, artifact collecting, or metal detecting in any list of

rules for visitors to the Premises;

4. The right to convey the Premises in its entirety;

5. The installation of temporary and permanent boundary monuments delineating the Premises; erection and maintenance of signs identifying ownership of the Premises, its boundaries, its status as conservation land, the restrictions on the use of the Premises, or for providing other like information. Signage will be subject to any applicable local approvals;

6. The right to use and maintain the existing foot path leading from Grantor's adjoining land west across the Premises' heathland to North Pamet Road, as shown in Appendix G, including the timber-tie steps descending the slope to the roadway, including the right to mow the eastern segment of said path as it crosses the stand of little blue stem (as shown in Appendix G and Photo #8) and other grasses, but not the portion of the path that crosses the bearberry groundcover;

7. The continued, pre-existing use of the drainage easement as recorded in Deeds Book 802 Page 29;

8. The right, subject to local wetlands regulations, to cross the wetland of the Pamet River on the Premises from Grantor's adjoining land in order to access the river for navigation with hand-carried small craft, but not to store any boats or related items on the Premises; and,

9. Any work undertaken in conjunction with the reserved rights mentioned above in this Section B. shall seek to minimize disturbance within the Premises. Upon completion of any site work performed in conjunction with this Section B, any disturbed areas shall be restored substantially to match the conditions with respect to soil material, grade, and vegetated ground cover that existed prior to said work, particularly in the rare heathland habitat. Stumps should be ground to prevent re-sprouting; slash shall be removed from the heathland.

The exercise of any right or obligation reserved by the Grantor under this Section B shall be in compliance with all permitting requirements, the then-current Zoning By-Laws of the Town of Truro, and all other applicable federal, state and local law. The inclusion of any reserved right in this Section B requiring a permit from a public agency does not imply that the Grantee or the Commonwealth takes any position on whether such permit should be issued.

C. Notice and Approval. Whenever notice to or approval by the Grantee is required under the provisions herein, the Grantor shall notify the Grantee in writing, by a method requiring receipt, not less than sixty (60) days prior to the date the Grantor intends to undertake the activity in question. The notice shall describe the nature, scope, design, location, timetable and any other material aspect of the proposed activity in sufficient detail to permit the Grantee to make an informed judgment as to its consistency with the purposes and performance standards of this Restriction. Where the Grantee's approval is required, the Grantee shall grant or withhold its approval in writing within sixty days (60) days of receipt of the Grantor's written request therefore. Failure of Grantee to deliver a written response to Grantor in accordance with the prescribed timeframe shall be deemed to constitute written approval by Grantee of any request submitted for approval that is not prohibited herein and that will not materially impair the purposes of this

Conservation Restriction, provided that Grantor's request sets forth in substance the provisions of this section relating to deemed approval after the passage of time.

D.1 Extinguishment. If circumstances arise in the future such as to render the purpose of this Conservation Restriction impossible to accomplish, this Conservation Restriction can be terminated or extinguished, whether in whole or in part, only by judicial proceedings in a court of competent jurisdiction, and after review by the Massachusetts Secretary of Energy and Environmental Affairs. If any change in conditions ever gives rise to extinguishment or other release of the Conservation Restriction under applicable law, then the Grantee, on a subsequent sale, exchange or involuntary conversion of the Premises, shall be entitled to a portion of the proceeds in accordance with Section II.D.2. below, subject, however, to any applicable law that expressly provides for a different disposition of the proceeds. The Grantee shall use its share of the proceeds in a manner consistent with the conservation purposes set forth herein.

D.2 Proceeds. The Grantor and the Grantee agree that donation of this Conservation Restriction gives rise to a real property right, immediately vested in the Grantee, with a fair market value that is at least equal to the proportionate value that this Conservation Restriction, determined at the time of the gift, bears to the value of the entire property as unencumbered at that time. For the purposes of this Section, the ratio of the value of this Conservation Restriction to that value of the Premises unencumbered by this Conservation Restriction shall remain constant. To establish this proportionate value, Grantor shall provide Grantee with a complete copy of any qualified appraisal performed for Grantor (at the time of donation of this Conservation Restriction) as required under Internal Revenue Code Sec. 170(h).

D.3 Grantor/Grantee Cooperation Regarding Public Action. Whenever all or part of the Premises or any interest therein is taken by public authority under power of eminent domain or other act of public authority, then the Grantor and the Grantee shall cooperate in recovering the full value of all direct and consequential damages resulting from such action. All related expenses incurred by the Grantor and the Grantee under this Section shall first be paid out of any recovered proceeds, and the remaining proceeds shall be distributed between the Grantor and the Grantee in shares equal to such proportionate value, as noted in Section II.D.2 above. The Grantee shall use its share of the proceeds in a manner consistent with the purposes of this grant.

E. Access. The Conservation Restriction hereby conveyed does not grant to the Grantee, to the public generally, or to any other person any right to enter upon the Premises, except the Grantee and its representatives are granted the right to enter the Premises (a) after reasonable notification, at reasonable times and in a reasonable manner for the purpose of inspecting the same to determine compliance with the provisions of this Restriction; and (b) after thirty (30) days prior written notice, to take any and all actions with respect to the Premises as may be necessary or appropriate, with or without order of court, to remedy, abate or enforce any violation hereof unless the Grantor has prior to the expiration of said thirty (30) days given written notice to the Grantee reasonably addressing all alleged violations and setting forth a reasonable plan to remedy any such alleged violation and has made reasonable efforts to cease the activity or to begin remediation.

F. Legal Remedies of the Grantee. The rights hereby granted shall include the right to enforce this Restriction by appropriate legal proceedings and to obtain injunctive and other equitable relief against any violations, including without limitation relief requiring restoration of the

Premises to its condition at the time of this grant (it being agreed that the Grantee shall have no adequate remedy at law), and shall be in addition to, and not in limitation of, any other rights and remedies available to the Grantee. Prior to instituting litigation to enforce any violations of this Restriction, however, the Grantee shall first notify the Grantor and request the Grantor to remedy the violation; if the violation is not remedied within sixty (60) days, then the parties shall make a good faith effort to mediate the dispute before litigation is commenced.

Grantee shall not, however, have the right to bring an action against Grantor with respect to a violation of this Conservation Restriction by trespassers or other third persons whose entry on the Property is not authorized or voluntarily acquiesced in by Grantor; Grantor agrees that Grantor will not voluntarily acquiesce in any violation of this Conservation Restriction by trespassers or such other third persons; and Grantor further agrees that, at the request of Grantee, Grantor will make reasonable efforts to deter such activities and to remedy the violation and will cooperate with Grantee to enforce this Conservation Restriction against trespassers and such other third persons.

In the event of a dispute over the boundaries of the Premises, the Grantor shall pay for a survey and permanent boundary markers delineating the Premises.

If Grantee prevails in any action to enforce the terms of this Restriction, the Grantor, its successors and assigns, as the case may be, shall reimburse the Grantee for all reasonable costs and expenses (not including attorney's fees) incurred in enforcing this Restriction or in taking reasonable measures to remedy or abate any violation thereof. If Grantor prevails in any action brought by Grantee to enforce the terms of this Restriction, the Grantee, successors and assigns, as the case may be, shall reimburse the Grantor for all reasonable costs and expenses (not including attorney's fees) incurred in defending such action to enforce this Restriction.

The Grantor, its successors and assigns shall each be liable under this Section for only such violations of this Restriction as may exist during its respective periods of ownership of the Premises. By their acceptance, the Grantee does not undertake any liability or obligation relating to the condition of the Premises, including with respect to compliance with hazardous materials or other environmental laws and regulations, or for acts not caused by the Grantee or its agents. Enforcement of the terms of this Restriction shall be at the discretion of the Grantee, and any election by the Grantee as to the manner and timing of its right to enforce this Restriction or otherwise exercise its rights hereunder shall not be deemed or construed to be a waiver of such rights.

G. Acts Beyond Grantor's Control. Nothing contained in this Restriction shall be construed to entitle the Grantee to bring any action against the Grantor, for any injury to or change in the Premises resulting from causes beyond the Grantor's control, including, but not limited to, fire, road drainage, flood, storm, natural erosion, or from any prudent action taken by the Grantor, under emergency conditions to prevent, abate, or mitigate significant injury to the Premises resulting from such causes. Notwithstanding the foregoing, nothing herein shall preclude Grantor's and Grantee's rights to pursue any third party for damages to the Premises from vandalism, trespass, or any other violation of the terms of this Restriction.

H. Assignability

1. Running of the Burden

The burdens of this Conservation Restriction shall run with the Premises in perpetuity, and shall be enforceable against the Grantor and the successors and assigns of the Grantor holding any interest in the Premises.

2. Execution of Instruments

The Grantee is authorized to record or file any notices or instruments appropriate to assuring the perpetual enforceability of this Conservation Restriction; the Grantor, on behalf of herself and her successors and assigns, appoint the Grantee their attorney-in-fact to execute, acknowledge and deliver any such instruments on her behalf. Without limiting the foregoing, the Grantor and her successors and assigns agree themselves to execute any such instruments upon request.

3. Running of the Benefit

The benefits of this Conservation Restriction shall run to the Grantee, shall be in gross and shall not be assignable by the Grantee, except in the following instances:

As a condition of any assignment, the Grantee shall require that the purpose of this Conservation Restriction continues to be carried out; and the Assignee, at the time of the assignment, qualifies under Section 170(h) of the Internal Revenue Code of 1986, as amended, and applicable regulations thereunder, and is a donee eligible to receive this Conservation Restriction under Section 32 of Chapter 184 of the General Laws of Massachusetts. Any assignment will comply with article 97 of the Amendments to the Constitution of the Commonwealth of Massachusetts, if applicable.

I. Subsequent Transfers

The Grantor agrees to incorporate by reference the terms of this Conservation Restriction in any deed or other legal instrument by which he divests himself of any interest in all or a portion of the Premises, including a leasehold interest and to notify the Grantee within 20 days of such transfer. Failure to do either shall not impair the validity or enforceability of this Conservation Restriction. Any transfer will comply with article 97 of the Amendments to the Constitution of the Commonwealth of Massachusetts, if applicable.

The Grantor shall not be liable for violations occurring after his or her ownership. Liability for any acts or omissions occurring prior to any transfer and liability for any transfer if in violation of this CR shall survive the transfer. Any new owner shall cooperate in the restoration of the Premises or removal of violations caused by prior owner(s) and may be held responsible for any continuing violations.

J. Estoppel Certificates

Upon request by the Grantor, the Grantee shall, within thirty (30) days, execute and deliver to the Grantor any document, including an estoppel certificate, which certifies the Grantor's compliance or non-compliance with the terms of this Conservation Restriction.

K. Non-Merger

The parties intend that any future acquisition of the Premises by the Grantee shall not result in a merger of the Conservation Restriction into the fee. The Grantor agrees that it will not grant, and the Grantee agrees that it will not take title, to any part of the Premises without having first assigned this Conservation Restriction to a qualified non-fee owner to ensure that merger does not occur and that this Conservation Restriction continues to be enforceable buy a non-fee owner.

L. Amendment

If circumstances arise under which an amendment to or modification of this Conservation Restriction would be appropriate, Grantor and Grantee may jointly amend this Conservation Restriction; provided that no amendment shall be allowed that will affect the qualification of this Conservation Restriction or the status of Grantee under any applicable laws, including Section 170(h) of the Internal Revenue Code of 1986, as amended, or Sections 31-33 of Chapter 184 of the General laws of Massachusetts. Any amendments to this conservation restriction shall occur only in exceptional circumstances. The Grantee will consider amendments only to correct an error or oversight, to clarify an ambiguity, or where there is a net gain in conservation value. All expenses of all parties in considering and/or implementing an amendment shall be borne by the persons or entity seeking the amendment. Any amendment shall be consistent with the purposes of this Conservation Restriction, shall not affect its perpetual duration, shall be approved by the Secretary of Energy and Environmental Affairs and if applicable, shall comply with the provisions of Article 97 of the Amendments to the Massachusetts Constitution, and any gifts, grants or funding requirements**.** Any amendment shall be recorded in the Barnstable County Registry of Deeds.

Further, the Grantee shall not consider any amendment to this Conservation Restriction UNLESS all of the following conditions are met:

1. The minimum amount of amendment, as to terms, land area or structural dimensions, activity, or level of use, is proposed to accommodate the proposal;
2. Whenever possible, mitigation measures of like kind be proposed and the substitution be more advantageous to the cause of conservation;
3. There will be a net gain to conservation values offered through mitigation to the affected parcel or its immediate vicinity; and,
4. Cash values of items or areas proposed for release, amendment or mitigation may be disregarded, in Grantee's sole discretion, in the equation to determine net gain to conservation values.

M. Effective Date

This Conservation Restriction shall be effective when the Grantor and the Grantee have executed it, the administrative approvals required by Section 32 of Chapter 184 of the General Laws have been obtained, and it has been recorded in the Barnstable Registry of Deeds. The Grantee shall record this instrument in timely manner in the Barnstable Registry of Deeds.

N. Notices

Any notice, demand, request, consent, approval or communication that either party desires or is required to give to the other shall be in writing and either served personally or sent by first class mail, postage pre-paid, addressed as follows:

To Grantor: Richard F.X. McArdle and Sonia F. McArdle
1511 North Astor Street
Chicago IL 60610

To Grantee: Truro Conservation Trust
P.O. Box 327, North Truro MA 02652

or to such other address as any of the above parties shall designate from time to time by written notice to the other or that is reasonably ascertainable by the parties.

O. General Provisions

1. Controlling Law

The interpretation and performance of this Restriction shall be governed by the laws of the Commonwealth of Massachusetts.

2. Liberal Construction

Any general rule of construction to the contrary notwithstanding, this Restriction shall be liberally construed in favor of the grant to effect the purpose of this Restriction and the policy and purposes of Massachusetts General Laws Chapter 184, Sections 31-33. If any provision in this instrument is found to be ambiguous, any interpretation consistent with the purpose of this Restriction that would render the provision valid shall be favored over any interpretation that would render it invalid.

3. Severability

If any provision of this Restriction or the application thereof to any person or circumstance is found to be invalid, the remainder of the provision of this Restriction shall not be affected thereby.

4. Entire Agreement

This instrument sets forth the entire agreement of the parties with respect to this Restriction and supersedes all prior discussions, negotiations, understandings or agreements relating to the Restriction, all of which are merged herein.

P. Pre-existing Public Rights

Approval of this Conservation Restriction pursuant to M.G.L. Chapter 184, Section 32 by any municipal officials and by the Secretary of Energy and Environmental Affairs is not to be construed as representing the existence or non-existence of any pre-existing rights of the public, if any, in and to the Premises, and any such pre-existing rights of the public, if any, are not affected by the granting of this Conservation Restriction.

Attached hereto and incorporated herein are the following:

Signatures:

Grantor - Richard F.X. McArdle and Sonia F. McArdle
Grantee – Truro Conservation Trust
Town of Truro Board of Selectmen
Secretary, MA Executive Office of Energy and Environmental Affairs

Exhibits:

A. Legal Description of the Premises

A-1. CR Sketch Plan

B. Baseline Study

[REMAINDER OF PAGE INTENTIONALLY LEFT BLANK]

EXECUTED as a sealed instrument under the pains and penalties of perjury on this _____ day of _____, 2016.

GRANTOR:

_____ _____
RICHARD F. X. McARDLE SONIA F. McARDLE

Date: _____ Date: _____

STATE OF ILLINOIS

Cook, ss.

On this _____ day of _____2016, before me, the undersigned notary public, personally appeared Richard F. X. McArdle and Sonia F. McArdle, as aforesaid, proved to me through satisfactory evidence of identification, which were [ ] IL driver's licenses or [ ] _____ _____, to be the persons whose names are signed on the preceding or attached document, and acknowledged to me that they signed it voluntarily for its stated purpose.

_____
Notary Public:
My Commission Expires:

ACCEPTANCE OF GRANT

At a meeting duly held on _____ 2016, The Truro Conservation Trust voted to accept the foregoing Conservation Restriction from Richard F.X. McArdle and Sonia F. McArdle.

Grantee: Trustees of the Truro Conservation Trust

_____ _____
Alfred Gaechter, President/Trustee

_____ _____

_____ _____

_____ _____

_____ _____

_____ _____

_____ _____

COMMONWEALTH OF MASSACHUSETTS

Barnstable, ss. _____ 2016

Then personally appeared the above-named Alfred Gaechter, President and Trustee of Truro Conservation Trust, and proved to me through satisfactory evidence of identification, which was personal knowledge of identity, to be the person whose name is signed on the document, and acknowledged he is duly authorized to act on behalf of said Trust, and further acknowledged the foregoing instrument to be the free act and deed of said Trust, before me.

_____
Mark H. Robinson, Notary Public
My commission expires: 24 July 2020

APPROVAL OF GRANT

At a public meeting duly held on _____, 2016 the Selectmen of the Town of Truro, Massachusetts voted to approve, pursuant to M.G.L. Chapter 184, Section 32, the foregoing Restriction from Richard F.X. McArdle and Sonia F. McArdle to The Truro Conservation Trust.

_____ _____

_____ _____

_____

COMMONWEALTH OF MASSACHUSETTS

Barnstable, ss. _____, 2016.

Then personally appeared the above-named _____, the person whose name is signed on the document and proved to me through satisfactory evidence of identification, which was personal knowledge of identity, and who being by me duly sworn did say that s/he is the Chair of the Selectmen of the Town of Truro, the municipal corporation named in the foregoing instrument; that s/he is duly authorized to act on behalf of said corporation; that the seal affixed to said instrument is the corporate seal of said corporation; and acknowledged the foregoing instrument to be the free act and deed of said corporation.

_____
Notary Public
My commission expires:

APPROVAL BY
SECRETARY OF ENERGY AND ENVIRONMENTAL AFFAIRS
COMMONWEALTH OF MASSACHUSETTS

The undersigned, Secretary of the Executive Office of Energy & Environmental Affairs of the Commonwealth of Massachusetts, hereby certifies that the foregoing Restriction from Richard F.X. McArdle and Sonia F. McArdle to the Truro Conservation Trust has been approved in the public interest pursuant to M.G.L. Chapter 184, Section 32.

Date:_____, 2016 _____

Matthew A. Beaton, Secretary
Executive Office of Energy
& Environmental Affairs

COMMONWEALTH OF MASSACHUSETTS

Suffolk, ss. _____, 2016.

Then personally appeared the above-named Matthew A. Beaton, and proved to me through satisfactory evidence of identification, which was personal knowledge of identity, to be the person whose name is signed on the document and acknowledged to me that he signed it voluntarily as Secretary of Energy and Environmental Affairs for the Commonwealth of Massachusetts, for its stated purpose.

_____

Notary Public
My commission expires:

EXHIBIT A

McARDLE-PAMET RIVER CONSERVATION RESTRICTION
TRURO MA

DESCRIPTION OF THE PREMISES

The land subject to this Conservation Restriction (the "Premises") is described as being a tract of vacant land situated in the Town of Truro, Barnstable County, Massachusetts, bounded and described as follows:

> **Lot 1 and Lot 2 and Parcel A** as shown on a Division of Land attached hereto as Exhibit A-1, entitled, "Division Plan of Land in Truro made for Richard McArdle, Scale 1" = 50', March 17, 2016, Slade Associates, Inc. Registered Land Surveyors, 10 Pine Point Rd, Wellfleet, MA 02667," TO BE RECORDED HEREWITH.

Containing 2.16 acres upland and 9.00 acres wetland (11.16 acres total), according to survey.

A reduced copy of said plan is attached hereto and recorded herewith as Exhibit A-1.

The Restricted Premises is a portion of the Grantor's 15.48-acre parcel at locus.

For our title, see deed recorded in Barnstable County Registry of Deeds in Deeds Book 25616 Page 96.

Property Address: 15 North Pamet Road, Truro, Massachusetts

Town of Truro Assessors Map 51, Parcel 13 (portion)

EXHIBIT A-1
McARDLE-PAMET RIVER CONSERVATION RESTRICTION
TRURO MA
SKETCH OF THE PREMISES

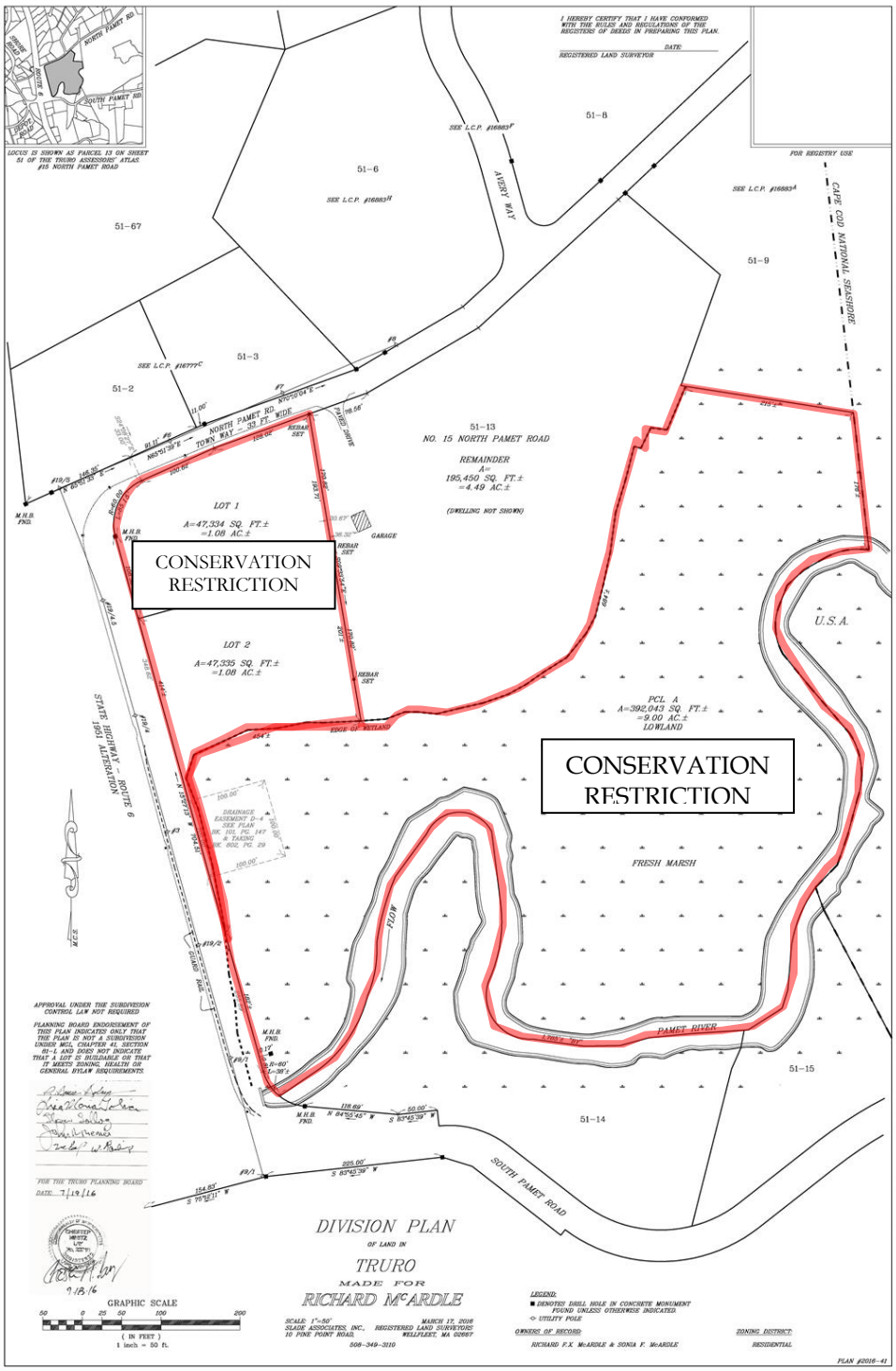

Agenda Item: 5D

TOWN OF TRURO

Board of Selectmen Agenda Item

DEPARTMENT: Administration

REQUESTOR: Nicole Tudor, Executive Assistant, on behalf of Fred Gaechter, President of the Truro Conservation Trust

REQUESTED MEETING DATE: September 13, 2016

ITEM: Discussion on Naming Walking Trail Located on Town Conservation Land at Edgewood Farm

EXPLANATION: Article 16, *Request from Truro Conservation Trust for a permanent easement over town owned land,* passed unanimously at the 2016 Annual Town Meeting. Granting of the perpetual trail easement is pending a Special Act authorizing the Town of Truro to convey a perpetual trail easement on Conservation Land to Truro Conservation Trust. Representative Sarah Peake has indicated that she will introduce the act. AmeriCorps members assisted with clearing for the trail pathway. The trail on the Town Conservation Land is now ready for naming and Mr. Gaechter wishes to discuss the name with the Board.

SUGGESTED ACTION: *MOTION TO*

ATTACHMENTS:

1. Truro Conservation Trust June Newsletter – Edgewood Farm Trail

NEWSLETTER

Summer 2016

Truro Conservation Trust, P.O. Box 327, North Truro, MA 02652
www.TruroConservationTrust.org

Kava Family Property

The Kava family has owned the property at 4 Great Hills Road for generations. The 2.75 acre bay-front property is adjacent to the family's summer residence. One can only imagine the memories of family and friends associated with their home and this land. Several years ago the family protected the vacant parcel with a Conservation Restriction (CR) held by the Trust; they wanted to ensure that it would be preserved and protected as conservation land.

To that end, the family decided in 2015 to undo the CR and donate the land outright, with a transfer of the deed, to the Trust. The multiple-step process is complete and the land, now owned by the Trust, will be protected in perpetuity. We thank the Kava family for this donation and their support for land conservation. We will protect it as they would have. The photo is taken from the property looking out to Cape Cod Bay.

Edgewood Farm

Over the last two years, we have reported on the Trust's project to purchase two of the four lots known as Edgewood Farm from the Meldahl family. Lots 3 and 4, approximately 4 acres of pristine forest, are now owned by the Trust and lots 1 and 2 are owned by the Center for the Arts at Castle Hill. Although sold by the family at below market value, this was the largest purchase in the long history of the Trust.

The two lots are adjacent to a larger conservation lot owned by the Town. The Trust and the Town are now in the process of completing connecting public-access trails across the combined land. After hiking up a modest hill, the trail opens up at a bench where a hiker will be rewarded with a marvelous view over Seashore land to the ocean. See page 4 for a map of the new trails. The portion of the trails owned by the Trust has been named the "Kuechle Trail" in memory of David Kuechle, a past Trustee, whose bequest several years ago was used to purchase the lots. Funds remain from the bequest for another future land purchase. *Continued on page 4*

Joyce Johnson House and Land

Once again, you have read about the Trust's joint project with Joyce Johnson's estate and the Center for the Arts at Castle Hill to protect the approximate one acre of land and to convert the house to an artists' studio for classes, artist's space, and exhibits. An agreement has been reached that includes a Conservation Restriction on the land surrounding the house while enabling the use of the land for passive artistic events. Similar to the Edgewood Farm project, this is an example of two local non-profit organizations working together for common good. The photo shows the house and land. Work will commence this year to convert the

house and open up the land for its intended purposes – the synergy of art and conservation.

Signs of the Future

The Trustees have debated long and hard over the years to determine whether to place signs on some appropriate properties to identify them as Truro Conservation Trust land. It was agreed that minimalist signs placed on a very limited number of properties could promote conservation and the Trust's efforts to protect and preserve the land. Signs were produced and, over the last couple of weeks, several have been placed on select properties. More locations are under consideration. The simple signs include only the Trust name and logo. Three of our Trustees are largely responsible for the success of this project: Tony Hodgin, Susan Travers, and Bill Worthington. The photo shows the sign recently placed on the Morea property on Route 6.

The Annual Meeting of the Truro Conservation Trust will be held at 10 AM on July 23, 2016 at the Council on Aging, 7 Standish Way, North Truro. The purpose of the Annual Meeting is to present a report to members on the status of the Trust, and to hold the election of Trustees. The Nominating Committee recommends the re-election of Trustees Amanda Reed and Meg Royka for 5 year terms and the election of each of the following to a five year term on the Board of Trustees: Tom Bow, Guillermo Chang, Valerie Falk, and Lisa Maria Tobia. Any member of the Trust, however, may submit a petition signed by ten (10) members of the Trust nominating a candidate or candidates. Refreshments will be served.

Edgewood Farm continued

The photo is taken at the base of the trail looking up the hill towards the bench and viewpoint.

Trail Map

Stewardship

Trail maintenance is always a spring priority in preparation for the summer hiking season. In addition to the development of new trails at Edgewood Farm, we have refurbished the Keezer Trail and cleared invasive species from an overgrown lot near Corn Hill Beach. We could not have accomplished all this trail work without the assistance of AmeriCorp staff and volunteers. This photo is of a number of the AmeriCorps personnel at the Keezer Trail on Francis Farm Road.

Truro Conservation Trust

P.O. Box 327
North Truro, MA 02652

www.TruroConservationTrust.org

Trustees

Fred Gaechter, Chair
Tony Hodgin, Vice Chair
Phil Smith, Treasurer
Meg Royka, Secretary

Robert Bednarek
Brian Boyle
Tom Bow
Guillermo Chang
Valerie Falk
Amanda Reed
Irma Ruckstuhl
Lisa Maria Tobia
Susan Travers
Bill Worthington

Dear Friends and Neighbors,

Last summer, in recognition of her long standing dedication and many years of outstanding service to the Trust, Carol Green was named Trustee Emeritus and "retired" from active participation on our board. In the fall, Guillermo Chang and Lisa Maria Tobia joined the board, bringing additional enthusiasm and talents. Both are year round Truro residents. Guillermo Chang has a keen interest in the natural environment and the conservation of land and open space. Lisa Maria Tobia, a real estate broker and manager, serves as chair of the town's Planning Board and part-time dispatcher for the Police and Fire Departments. We welcome these new Trustees.

As you can see by the articles in this Newsletter, your Trustees have had a busy and productive winter and spring. We continue to acquire and protect new land both through acquisition and donation. We also constantly maintain and improve the land already under our conservation management. All this is possible because of our active and involved Trustees and your continuing support. We look forward to a wonderful summer on the Cape and hope that you will be joining us in Truro.

See you in Town,

Fred Gaechter
Chairman

TOWN OF TRURO

Board of Selectmen Agenda Item

DEPARTMENT: Administration

REQUESTOR: Rae Ann Palmer, Town Manager

REQUESTED MEETING DATE: September 13, 2016

ITEM: Review and Approval of Board of Selectmen Policy #57 for Residential Hiring Preference

EXPLANATION: Attached is a policy to authorize the application of a residential hiring preference for Town residents that apply for initial employment positions. For the purpose of this policy, a "resident" shall be defined as a person who has lived in the town of Truro for the majority of the year before the date the vacancy for the initial position is posted. Definition of a "residence" is provided as a place where one actually lived or intended as his or her permanent home. Once approved, it will be the policy of the Town and any person applying for an initial position with the Town, shall be awarded a ten (10) point residency preference over non-Town resident applicants. If the person is selected for the position, that person must provide proof of residency and will be required to maintain such residency for a minimum of one (1) year from the effective date of appointment.

FINANCIAL SOURCE (IF APPLICABLE): N/A

IMPACT IF NOT APPROVED: There will be no policy in place for residential hiring preference.

SUGGESTED ACTION: *MOTION TO approve Board of Selectmen Policy #57 – Residential Hiring Preference.*

ATTACHMENTS:

1. Draft Residential Hiring Preference Policy #57

TOWN OF TRURO

P.O. Box 2030, Truro MA 02666

Tel: (508) 349-7004 Fax: (508) 349-5505

POLICY MEMORANDUM #57

Date: September 13, 2016

Subject: **RESIDENTIAL PREFERENCE HIRING POLICY**

Section I – Purpose

The purpose of this Policy is to provide applicants for initial employment positions within the Town of Truro ("Town") with notice of the Town's residential preference hiring policy and program as it affects them. This policy is intended to give a preference to those applicants for initial employment who have attained "resident" status within the Town as of the date the vacancy is posted.

The Town is committed to employ, in its best judgment, suitable candidates for approved positions while engaging in recruitment and selection processes that are in compliance with all applicable labor and employment laws. It is the policy of the Town to provide equal employment opportunity for employment to all applicants and employees.

Section II – Definitions

1. Resident – for purposes of this policy, a "resident" shall be defined as a person who has lived in the Town of Truro for the majority of the **year** before the **date the vacancy for the initial position is posted.**

2. Residence – for purposes of this policy, a "residence" shall be defined as the place where one actually lived and intended as his or her **permanent home**.

    a. If a person lives at college during the school year, he or she may claim as his or her permanent residence the place where he or she resides during the rest of the year.

    b. If a person was in the military, he or she may claim residency within the Town of Truro if he or she lived in the Town when he or she entered the military, if he or she returned to the Town after leaving the military, or if he or she is still in the military, he or she intends to return to that residence in the Town.

c. If a person permanently moves to another city or town at any time during the year before the vacancy is posted, he or she will **not** qualify for residency preference on his or her application for employment with the Town.

Section III - Policy

It is the policy of the Town that a person applying for an initial position with the Town, who is a bona fide resident of the Town **at the time the position is posted**, shall be awarded a ten (10) point residency preference over non-Town resident applicants. To receive this preference, the applicant must provide proof of residency in the form of a deed, mortgage, property tax receipt, rental housing agreement, utility bill, vehicle registration or title, valid and up-to-date driver's license, or state-issued identification card. If selected, the person shall be required to maintain such residency for a minimum of one (1) year from the effective date of the appointment.

Section IV – Determination of Residency

The Town Manager shall be charged with verifying the accuracy of a claim of residency.

Section V – Willful or Deliberate False Claims of Residency

Any applicant who is found to have willfully or deliberately claimed residency within the Town of Truro on his or her application, knowing the same to be inaccurate or untrue, shall be immediately disqualified from candidacy for the vacancy for which he or she applied.

Paul Wisotzky, Chairman,	Janet W. Worthington, Vice-Chairman
Maureen Burgess	Jay Coburn, Clerk

Robert Weinstein

Board of Selectmen
Town of Truro

Agenda Item: 5F

TOWN OF TRURO

Board of Selectmen Agenda Item

DEPARTMENT: Administration

REQUESTOR: Rae Ann Palmer, Town Manager

REQUESTED MEETING DATE: September 13, 2016

ITEM: Discussion of Solar Contract and Possible Alternatives

EXPLANATION: Closure work on the Transfer Station landfill cap is pending until such time as the AT&T trenching work and permitting is resolved. The work can begin as soon as DEP determines what the resolution will be to AT&T's unpermitted work and what repair work will be required for both the damage to the cap and the improper conduit installation by AT&T. Due to the status of the solar project and changes to the applicable laws, the economics of the current contract with Sun Edison are expected to be negatively affected. Section 2.7 of the agreement with Sun Edison allows the Town to terminate the agreement if there is a change in applicable law that is reasonably expected to adversely affect the economics of the agreement for the Town. Recent changes in law/regulation have modified the calculation and value of net metering credits. Solar facilities that do not qualify as a "net metering facility of a municipality or other governmental entity" and do not submit a cap allocation application before September 26, 2016 will receive net metering credits valued at about 40% less than the value expected when the Town signed the agreement with Sun Edison. The Town's project does not qualify as a municipality project due to the inclusion of community solar. SunEdison would need a Post Closure Use permit from DEP to submit a cap allocation application prior to the deadline, which has not been issued. The attached report from the Energy Committee very clearly explains the impact.

Another solar developer, Nexamp, is building a solar installation in Canton, MA on the roof of a building and is offering to sell the net metering credits to the Town. This project would provide about 70% of what the Town uses in electricity and would also provide community solar on a first come, first served basis. The savings to the Town would be approximately 25% off the Eversource price for the length of the contract. The contractual minimum price may affect the savings percentage. While the economics are not as favorable as the original contract with SunEdison, they are much better than what would likely be in offered in a revised contract.

Based on conversation with Energy Committee members, it may be in the Town's best interest to leave the solar lease in place and cancel the net metering portion of the agreement or to cancel the entire agreement.

At this time, the Energy Committee is recommending that the Town pursue the Nexamp project, which must be signed by September 26. I concur with the recommendation. In addition, I recommend that we ask Attorney Holland to issue a notice to terminate and/or to begin negotiations with SunEdison to terminate the contract either in whole or part.

Attorney Holland has reviewed the Nexamp contract and suggested changes which have not yet been negotiated with Nexamp. I request that you authorize the Chair to sign the contract pending final negotiations by Town Counsel.

IMPACT IF NOT APPROVED: The Town is not likely to recognize savings from the development of a solar project.

SUGGESTED ACTION: *MOTION TO authorize Town Counsel to issue a notice to terminate and/or begin contract termination negotiations with SunEdison, and to authorize the Chair to sign a contract with Nexamp that has been finalized by Town Counsel.*

ATTACHMENTS:

1. Energy Committee Report

Agenda Item: 5F1

Energy Committee Report on Solar Project
September 13, 2016

The economics of the Town's proposed landfill project are almost certain to substantially degrade.

- **Net metering value.** After the state's net metering cap was hit last year, the legislature passed a law in April 2016 increasing the net metering cap but reducing the value of new net metering credits by 40%. To avoid that reduction, our project would have to submit a net metering application before September 26, but we will not have the Post-Closure Use Permit that is a pre-requisite for such application.
- **SREC value.** In addition, the value of the Solar Renewable Energy Credits is likely to be reduced by at least 20%. To avoid that reduction, our project would have to be mechanically complete by January 8, 2017, which is impossible given the status of our closure process. If the project is 50% spent by January 8 and then fully complete by May 8, 2017 – also highly unlikely – the SREC value would be reduced by 20%. If the project is completed after May 8, 2017, it will be subject to the rules of an anticipated "SREC"3 program, whose rules have not been issues but which are likely to be at least if not more restrictive than the current 20% reduction.

We have the option to terminate the SunEdison contract.

- **Contract revision.** We expect that SunEdison (or its successor) will at some point propose a substantial increase in the solar electricity price to the Town to reflect the lower net metering and SREC economics -- or else terminate because of the degraded economics.
- **Termination.** Counsel has confirmed that the Town may terminate the agreement due to these changes in applicable law which adversely affect the project's economics. We recommend that the Town contract for net metering credits from Nexamp for a proposed 630kWac solar project in Canton.
- **Favorable economics.** The economics of the Canton project are not as favorable as the original SunEdison project but almost certain to be better, most likely substantially better, than the anticipated revised SunEdison economics.
- **Community solar.** Nexamp, like SunEdison, can offer a community solar option to Truro residences and businesses on a first-come, first-served basis.

At the Energy Committee Meeting on August 31, 2016, the Committee voted to pursue the Nexamp Project.

Consent Agenda Item: 6A1

TOWN OF TRURO

Board of Selectmen Agenda Item

DEPARTMENT: Administration

REQUESTOR: Rae Ann Palmer, Town Manager

REQUESTED MEETING DATE: September 13, 2016

ITEM: Contract for GFM Enterprises for Transfer Station Remediation Project Bid

EXPLANATION: As part of the Town's ongoing efforts to finish closing the landfill, Weston and Sampson solicited bids for the remediation work/corrective actions for the closure of the landfill required by DEP. The bids also included an option for the repair of damage done by AT&T. GFM Enterprises was the lowest responsible bidder and as such, was awarded the Contract for the Truro Landfill Project. Staff is requesting that the Board approve the contract with GFM Enterprises in the amount of $218,000 to complete the work. Town Meeting previously authorized borrowing in the amount of $300,000 for this project.

Work will not commence until the Town has received permits from DEP to repair the damage. Staff met with DEP at their Lakeville office to discuss the unpermitted work completed by AT&T. It is anticipated that GFM will complete the work to repair the damage and the Town will be reimbursed by AT&T. The open question is what action must be completed regarding the conduit that AT&T installed. It is my understanding that additional work would need to be completed on the conduit so that it met DEP requirements or the conduit would need to be removed. We will try and resolve all of the issues before moving forward. It would not be in the Town's best interest to complete the work and then have AT&T do another conduit.

FINANCIAL SOURCE (IF APPLICABLE): Bond Anticipated Note with Cape Cod Five Cents Savings Bank.

IMPACT IF NOT APPROVED: The Truro landfill will not be capped properly which is a requirement of the Department of Environmental Protection.

SUGGESTED ACTION: *MOTION TO approve the Contract between the Town of Truro and GFM Enterprises for the Truro Transfer Station Remediation project and Authorize the Chair to Sign.*

ATTACHMENTS:

1. Contract between Town of Truro and GFM Enterprises.

Consent Agenda Item: 6A1

Weston & Sampson

5 Centennial Drive, Peabody, MA 01960 (HQ)
Tel: 978.532.1900

Truro, MA
W&S Job No. 2110522

August 12, 2016

Rea Ann Palmer
Town Administrator
24 Town Hall Road
Truro, MA 02666

Re: Truro Sanitary Landfill Corrective Actions

Dear Ms. Palmer,

Forwarded herewith for approval and execution are six (6) copies of the Contract for the Truro Sanitary Landfill Corrective Actions together with a draft Notice to Proceed.

Page 00520-3 of the Agreement requires the following signatures.

- Town Counsel should review the Agreement and signify Approval as to Form.
- The Town Accountant or Certification Official should sign the certification of appropriation block.
- You, as Town Administrator should execute the Agreement.

The date that you execute the Agreement should be inserted on Pages 00520-1, 00610-1, and 00615-1.

Revised Certificate of Insurance will be provided to include the waiver of subrogation for the Automobile and Workers Compensation Liabilities in favor of the Town and Weston & Sampson upon execution of the Contracts.

Please retain three (3) executed copies of the contract for the town's use, return two (2) copies to Weston & Sampson, and forward one (1) directly to GFM Enterprises, Inc. You should issue two copies of a Notice to Proceed to GFM after the contracts are signed with the Notice to Proceed effective date approximately ten (10) days after the Agreement signing date. The completion date for all work shall be 45 consecutive calendar days after the effective date indicated in the Notice to Proceed. Request that GFM acknowledge the Notice to Proceed by signing the Acknowledgement block and returning one copy.

Very truly yours,

WESTON & SAMPSON

David Burke
Manager Construction Services

O:\TRURO MA\CONSTRUCTION\CONTRACTS\EXECUTED.DOC

"DRAFT"

NOTICE TO PROCEED

TO: Jennifer Morris, CEO
GFM Enterprises, Inc.
2 George Holbrook Way
Harwich, MA 02645

Date:
Project: **2110522 Truro, MA**
Truro Sanitary Landfill Corrective Actions

You are hereby notified to commence WORK in accordance with the Agreement dated _____, 2016, on or before _____, 2016, and you are to complete all WORK within 45 consecutive calendar days thereafter.

Town of Truro, Massachusetts
Owner

By_____

Title_____

ACKNOWLEDGEMENT OF NOTICE
Receipt of the above NOTICE TO PROCEED
is hereby acknowledged:

this the _____ day of _____, 2016

GFM Enterprises, Inc.

By _____

Title_____

Employer Identification
Number _____

cc: David Burke - Weston & Sampson

T:\CSD\CSD FORM LETTER\NOTICE TO PROCEED.DOC

SECTION 00520

AGREEMENT

THIS AGREEMENT, made this _____ day of _____, 2016, by and between The Town of Truro, Massachusetts, hereinafter called "OWNER," acting herein through its Town Administrator, and GFM Enterprises, Inc. doing business as (a corporation) (~~a limited liability company~~) (~~a partnership~~) (~~a joint venture~~) (~~an individual~~)* located in the (~~City~~) (Town)* of Harwich, County of Barnstable, and State of Massachusetts, hereinafter called "CONTRACTOR."

WITNESSETH: That for and in consideration of the payments and agreements hereinafter mentioned, to be made and performed by the OWNER, the CONTRACTOR hereby agrees with the OWNER to commence and complete the project described as follows:

TRURO SANITARY LANDFILL CORRECTIVE ACTIONS,

hereinafter called the project, for the sum of **Two Hundred Eighteen Thousand** Dollars and **Zero** Cents (**$218,000.00**) and all extra work in connection therewith, under the terms as stated in the General and Supplementary Conditions; and at its own proper cost and expense to furnish superintendence, labor, services, materials, equipment, plant, machinery, apparatus, appliances, tools, supplies, bailing, shoring, removal, and all other things necessary to complete the said project in accordance with the conditions and prices stated in Section 00410 - FORM OF GENERAL BID, Section 00700 - GENERAL CONDITIONS, Section 00800 - SUPPLEMENTARY CONDITIONS - Section 00830, STATE REGULATIONS, the plans, which include all maps, plates, drawings, blue prints, and the specifications and all other contract documents therefor as prepared by Weston & Sampson Engineers, Inc., including all bid documents

Notwithstanding anything to the contrary in the Contract Documents, including but not limited to any claims procedure set forth therein, the Owner may withhold from payments due the Contractor the value of any claims of the Owner against the Contractor.

The CONTRACTOR hereby agrees to commence work under this contract on or before a date to be fixed in the written Notice to Proceed given by the OWNER to the CONTRACTOR and to fully complete the project within 45 consecutive days of the start date fixed in the Notice to Proceed. The CONTRACTOR further agrees to pay as liquidated damages the sum of $1,000 for each consecutive calendar day thereafter during which the work has not been fully completed, as provided in the Liquidated Damages provisions of Section 00800 - SUPPLEMENTARY CONDITIONS.

*Strike out inapplicable terms.

The CONTRACTOR shall not discriminate against or exclude any person from participation herein on grounds of race, color, religious creed, national origin, sex, sexual orientation, ancestry, or age; and that it shall take affirmative actions to insure that applicants are employed, and that employees are treated during their employment, without regard to race, color, religious creed, national origin, sex, sexual orientation, ancestry, age, or handicapped status.

The CONTRACTOR shall not participate in or cooperate with an international boycott, as defined in Section 999 (b)(3) and (4) of the Internal Revenue Code of 1986, as amended, or engage in conduct declared to be unlawful by Section 2 of Chapter 151E of the Massachusetts General Laws.

Applicable provisions of Massachusetts General Laws and Regulations and/or the United States Code and Code of Federal Regulations govern this Agreement and any provision in violation of the foregoing shall be deemed null, void and of no effect. Where conflict between Federal and State Laws and Regulations exists, the more stringent requirement shall apply.

Subject to G.L. c.30, sec. 39K and/or sec. 39G and G.L. c.30, sec. 39F, as applicable, the OWNER agrees to pay the CONTRACTOR in current funds for the performance of the Agreement, subject to additions and deductions, as provided in Section 00700 - GENERAL CONDITIONS, and to make payments on account thereof as provided in Section 00700 - GENERAL CONDITIONS and Section 00800 - SUPPLEMENTARY CONDITIONS

In accordance with the requirements of G.L. c.149, §27B, the Contractor shall submit, and shall require all of its subcontractors required to keep a record of hours and wages paid to laborers employed on the project to submit, to the awarding authority on a weekly basis, copies of such records. All such weekly submissions shall be accompanied by the following certification:

> The undersigned contractor hereby certifies, under the pains and penalties of perjury, that the foregoing payroll records are true and accurate records of the wages paid to laborers employed on the project for the period stated and said wages are in an amount no less than the prevailing wage rates established for the project by the Massachusetts Department of Labor and Workforce Development. The undersigned contractor agrees, in addition to any other remedies available to the awarding authority, to indemnify the awarding authority for, from and against any loss, expense, damages, actions or claims, including any expense incurred in connection with any delay or stoppage of the project work, arising out of or as a result of (1) the contractor's failure to pay laborers employed on the project the said applicable prevailing wage rates; (2) the failure of the foregoing payroll records to accurately state the said applicable prevailing wage rates; or (3) the failure of the foregoing payroll records to accurately represent the wages actually paid to laborers employed on the project.

IN WITNESS WHEREOF, the parties to these presents have executed this Agreement in six (6) counterparts, each of which shall be deemed an original, in the year and day first above mentioned.

AGREED:

Town of Truro, Massachusetts
(Owner)

By _____

Paul C. Wisotzky,
(Name)

Board of Selectmen, Chair
(Title)

GFM Enterprises, Inc.
(Contractor)

By J. Morris

JENNIFER MORRIS
(Name)

CEO
(Title)

2 GEORGE HOLBROOK WAY
(Address)

HARWICH, MA. 02645
(City and State)

Approved as to Form:

By_____
(Owner's Counsel)

_____
(Name)

In accordance with M.G.L. C.44, Section 31C, this is to certify that an appropriation in the amount of this Contract is available therefor and that the _____ has been authorized to execute the Contract and approve all requisitions and change orders.

By_____
(Owner's Accountant)

_____
(Name)

CERTIFICATE OF VOTE
(to be filed if Contractor is a Corporation)

I, JENNIFER MORRIS, hereby certify that I am the duly qualified and acting Secretary of
(Secretary of Corporation)
GFM ENTERPRISES INC and I further certify that a meeting of the Directors of said company,
(Name of Corporation)
duly called and held on 1.1.2014, at which all members were present and voting, the
(Date of Meeting)
following vote was unanimously passed:

VOTED: To authorize and empower

JENNIFER MORRIS

Anyone acting singly, to execute Forms of General Bid, Contracts or Bonds on behalf of the Corporation.

I further certify that the above vote is still in effect and has not been changed or modified in any respect.

By: J. Morris
(Secretary of Corporation)

A True Copy:

Attest: Mary K. Mosher
(Notary Public)

MARY K. MOSHER
Notary Public
Massachusetts
Commission Expires Aug 6, 2021

My Commission Expires: 8/6/2021
(Date)

Contractor's Certification

A Contractor will not be eligible for award of a contract unless such Contractor has submitted the following certification, which is deemed a part of the resulting contract:

CONTRACTOR'S CERTIFICATION

GFM ENTERPRISES INC.
Name of the General Contractor

certifies that it:

1. Will not discriminate in their employment practices;

2. Intends to use the following listed construction trades in the work under the contract:

   EXCAVATING, BACKFILLING, GRADING, DRAINAGE, LINER REPAIR, LOAMING

   and

3. Will make good faith efforts to comply with the minority employee and women employee workforce participation ratio goals and specific affirmative action steps contained herein; and

4. Is in compliance with all applicable federal and state laws, rules, and regulations governing fair labor and employment practices; and

5. Will provide the provisions of the "Supplemental Equal Employment Opportunity, Non-Discrimination and Affirmative Action Program" to each and every subcontractor employed on the Project and will incorporate the terms of this Section into all subcontracts and work orders entered into on the Project.

6. Agrees to comply with all provisions contained herein.

J. Morris
Signature of authorized representative of Contractor Date

JENNIFER MORRIS
Printed name of authorized representative of Contractor

Subcontractor's Certification

Prior to the award of any subcontract, regardless of tier, the prospective subcontractor must execute and submit to the General Contractor the following certification, which will be deemed a part of the resulting subcontract:

SUBCONTRACTOR'S CERTIFICATION

_____

Name of the Subcontractor

certifies that it:

7. Will not discriminate in their employment practices;

8. Intends to use the following listed construction trades in the work under the contract:

_____

_____

and

9. Will make good faith efforts to comply with the minority employee and women employee workforce participation ratio goals and specific affirmative action steps contained herein; and

10. Is in compliance with all applicable federal and state laws, rules, and regulations governing fair labor and employment practices; and

11. Will provide the provisions of the "Supplemental Equal Employment Opportunity, Non-Discrimination and Affirmative Action Program" to each and every subcontractor employed on the Project and will incorporate the terms of this Section into all subcontracts and work orders entered into on the Project.

12. Agrees to comply with all provisions contained herein.

_____

Signature of authorized representative of Subcontractor Date

_____

Printed name of authorized representative of Subcontractor

Bond No. CE11510700836
Executed in Sextuplet

SECTION 00610

PERFORMANCE BOND

KNOW ALL MEN BY THESE PRESENTS: That we GFM Enterprises, Inc.
(Name of Contractor)
a Corporation hereinafter called "Principal" and
(Corporation, Partnership, Joint Venture, LLC or Individual)
Philadelphia Indemnity Insurance* of Bala Cynwyd, State of Pennsylvania
*Company (Surety) (City)
hereinafter called the "Surety" and licensed by the State Division of Insurance to do business under the laws of the Commonwealth of Massachusetts, are held and firmly bound to the Town of Truro, Massachusetts, hereinafter called "Owner", in the penal sum of Two hundred eighteen thousand Dollars and Zero Cents($ 218,000.00) in lawful money of the United States, for the payment of which sum well and truly to be made, we bind ourselves, our heirs, executors, administrators and successors, jointly and severally, firmly by these presents.

THE CONDITION OF THIS OBLIGATION is such that whereas the Principal has entered into a certain contract with the Owner (the "Construction Contract"), dated the _____ day of _____, 2016, for the construction described as follows:

TRURO SANITARY LANDFILL CORRECTIVE ACTIONS

NOW, THEREFORE, if the Principal shall well, truly and faithfully perform its duties, all the undertakings, covenants, terms, conditions, and agreements of the Construction Contract during the original term thereof, and any extensions thereof which may be granted by the Owner, with or without notice to the Surety, and if he shall satisfy all claims and demands incurred under the Construction Contract, and shall fully indemnify and save harmless the Owner from all costs and damages which it may suffer by reason of failure to do so, and shall reimburse and repay the Owner all outlay and expense which the Owner may incur in making good any default, then this obligation shall be void; otherwise, this obligation shall remain in full force and effect.

PROVIDED, FURTHER, that the Surety's obligation under this Bond shall arise after (1) the Owner has declared the Principal in default of the Construction Contract or any provision thereof, or (2) has declared that the Principal has failed, or is otherwise unable or unwilling, to execute the work consistent with, and in conformance to, the Construction Contract (collectively referred to as a "Contractor Default"). The determination of a Contractor Default shall be made solely by the Owner. The Owner need not terminate the Construction Contract to declare a Contractor Default or to invoke its rights under this Bond, and Contractor hereby agrees not to assert any claims against Surety under any indemnity or similar agreements on the grounds that Surety has interfered with the Construction Contract by fulfilling its obligations hereunder in the absence of a termination of said contract.

When the Surety's obligation under this Bond arises, the Surety, at its sole expense and at the consent and election of the Owner, shall promptly take one of following steps: (1) arrange for the Principal to perform and complete the work of the Construction Contract; (2) arrange for a contractor other than the Principal to perform and complete the work of the Construction

Contract; (3) reimburse the Owner, in a manner and at such time as the Owner shall reasonably decide, for all costs and expenses incurred by the Owner in performing and completing the work of the Construction Contract. Surety will keep Owner reasonably informed of the progress, status and results of any investigation of any claim of the Owner.

If the Surety does not proceed as provided in this Bond with due diligence and all deliberate speed, the Surety shall be deemed to be in default of this Bond, and the Owner shall be entitled to enforce any remedy available to the Owner.

After the Surety's obligation under this Bond arises, the Surety is obligated, to the limit of the amounts of this Bond, for (1) the correction of defective work and completion of the Construction Contract; (2) additional design, professional services, and legal costs, including attorney's fees, resulting from the Contractor Default or from the default of the Surety under this Bond; (3) any additional work beyond the Construction Contract made necessary by the Contractor Default or default of the Surety under this Bond; (4) indemnification obligations of the Principal, if any, as provided in the Construction Contract; and (5) liquidated damages as provided in the Construction Contract, or if no such damages are specified, actual damages and consequential damages resulting from the Contractor Default or any default of the Surety under this Bond.

Any proceeding, legal or equitable, under this Bond shall be instituted in any court of competent jurisdiction in the Commonwealth of Massachusetts.

The Surety, for value received, hereby stipulates and agrees that no change, extension of time, alteration or addition to the terms of the Construction Contract or to the work to be performed thereunder or the specifications accompanying the same shall in any way affect its obligation on this bond, and it does hereby waive notice of any such change, extension of time, alteration or addition to the terms of the Construction Contract or to the work or to the specifications.

The Surety providing the Bond shall have a rating of A or better within Best's Key Rating Guide.

IN WITNESS WHEREOF, this instrument is executed in six (6) counterparts, each one of which shall be deemed an original, this the 26th day of July, 2016.

ATTEST:

GFM Enterprises, Inc.
Principal

By J. Morris
Signature

JENNIFER MORRIS CEO
Name and Title

2 George Holbrook Way
Address

Harwich, MA 02645
City and State

Megan Spann
Witness as to Principal Signature

MEGAN SPANN - ASSISTANT
Name and Title

602 SEA MEADOW LANE
Address

BREWSTER, MA 02631
City and State

(SEAL)

ATTEST:

Philadelphia Indemnity Insurance Company
Surety

By
Attorney-in-Fact Signature

Steven A. Swartz, Attorney-in-fact
Name and Title

One Bala Plaza Suite 100
Address

Bala Cynwyd, PA 19004
City and State

Kandis Gregory
Witness as to Surety Signature

Kandis Gregory, AVP Underwriting
Name and Title

1100 Via Callejon Suite A
Address

San Clemente, CA 92673
City and State

(SEAL)

NOTE: Date of Bond must not be prior to date of Contract. If Contractor is a Partnership, all partners should execute Bond.

END OF SECTION

O:\Truro MA\Landfill Certification - 2011\Specs\00610-Performance Bond.docx

California All-Purpose Certificate of Acknowledgment

A notary public or other officer completing this certificate verifies only the identity of the individual who signed the document to which this certificate is attached, and not the truthfulness, accuracy, or validity of that document.

State of California

County of Orange

s.s.

On July 26, 2016 before me, Derek Syme, Notary Public,

Name of Notary Public, Title

personally appeared Steven A. Swartz

Name(s) of Signer(s)

N/A

Name(s) of Signer(s)

who proved to me on the basis of satisfactory evidence to be the person(s) whose name(s) is/~~are~~ subscribed to the within instrument and acknowledged to me that he/~~she/they~~ executed the same in his/~~her/their~~ authorized capacity(~~ies~~), and that by his/~~her/their~~ signature(s) on the instrument the person(s), or the entity upon behalf of which the person(s) acted, executed the instrument.

I certify under PENALTY OF PERJURY under the laws of the State of California that the foregoing paragraph is true and correct.

WITNESS my hand and official seal.

Signature of Notary Public

DEREK SYME
Commission # 2123659
Notary Public - California
Orange County
My Comm. Expires Aug 15, 2019

Seal

OPTIONAL INFORMATION

Although the information in this section is not required by law, it could prevent fraudulent removal and reattachment of this acknowledgment to an unauthorized document and may prove useful to persons relying on the attached document.

Description of Attached Document

The preceding Certificate of Acknowledgment is attached to a document titled/for the purpose of Executed in Sextuplet Performance Bond No. CE11510700836,

containing 3 pages, and dated July 26, 2016.

The signer(s) capacity or authority is/are as:

- ☐ Individual(s)
- ☒ Attorney-in-fact
- ☐ Corporate Officer(s) _____
  Title(s)
- ☐ Guardian/Conservator
- ☐ Partner - Limited/General
- ☐ Trustee(s)
- ☐ Other: _____

representing: Philadelphia Indemnity Insurance Company

Name(s) of Person(s) or Entity(ies) Signer is Representing

Additional Information

Method of Signer Identification

Proved to me on the basis of satisfactory evidence:

☐ form(s) of identification ☐ credible witness(es)

Notarial event is detailed in notary journal on:

Page # _____ Entry # _____

Notary contact: _____

Other

☐ Additional Signer ☐ Signer(s) Thumbprints(s)

☐ _____

© 2009-2016 Notary Learning Center - All Rights Reserved You can purchase copies of this form from our web site at www.TheNotarySTORE.com

PHILADELPHIA INDEMNITY INSURANCE COMPANY
231 St. Asaph's Rd., Suite 100
Bala Cynwyd, PA 19004-0950

Power of Attorney

KNOW ALL PERSONS BY THESE PRESENTS: That **PHILADELPHIA INDEMNITY INSURANCE COMPANY** (the Company), a corporation organized and existing under the laws of the Commonwealth of Pennsylvania, does hereby constitute and appoint **Steven A. Swartz, Kelly Specht, Lorie Mandel, and Nicki Swartz, Michael Herranen and Thomas C. Buckner of the City of San Clemente, State of California of South Coast Surety**, its true and lawful Attorney-in-fact with full authority to execute on its behalf bonds, undertakings, recognizances and other contracts of indemnity and writings obligatory in the nature thereof, issued in the course of its business and to bind the Company thereby, in an amount not to exceed **$25,000,000.00**.

This Power of Attorney is granted and is signed and sealed by facsimile under and by the authority of the following Resolution adopted by the Board of Directors of PHILADELPHIA INDEMNITY INSURANCE COMPANY at a meeting duly called the 1st day of July, 2011.

RESOLVED: That the Board of Directors hereby authorizes the President or any Vice President of the Company to: (1) Appoint Attorney(s) in Fact and authorize the Attorney(s) in Fact to execute on behalf of the Company bonds and undertakings, contracts of indemnity and other writings obligatory in the nature thereof and to attach the seal of the Company thereto; and (2) to remove, at any time, any such Attorney-in-Fact and revoke the authority given. And, be it

FURTHER RESOLVED: That the signatures of such officers and the seal of the Company may be affixed to any such Power of Attorney or certificate relating thereto by facsimile, and any such Power of Attorney so executed and certified by facsimile signatures and facsimile seal shall be valid and biding upon the Company in the future with the respect to any bond or undertaking to which it is attached.

IN TESTIMONY WHEREOF, PHILADELPHIA INDEMNITY INSURANCE COMPANY HAS CAUSED THIS INSTRUMENT TO BE SIGNED AND ITS CORPORATE SEALTO BE AFFIXED BY ITS AUTHORIZED OFFICE THIS 10TH DAY OF JUNE 2013.

(Seal)

Robert D. O'Leary Jr., President & CEO
Philadelphia Indemnity Insurance Company

On this 10th day of June 2013, before me came the individual who executed the preceding instrument, to me personally known, and being by me duly sworn said that he is the therein described and authorized officer of the **PHILADELPHIA INDEMNITY INSURANCE COMPANY**; that the seal affixed to said instrument is the Corporate seal of said Company; that the said Corporate Seal and his signature were duly affixed.

COMMONWEALTH OF PENNSYLVANIA
Notarial Seal
Kimberly A. Kesslesk, Notary Public
Lower Merion Twp. Montgomery County
My Commission Expires Dec. 18, 2016
MEMBER, PENNSYLVANIA ASSOCIATION OF NOTARIES

Notary Public: _____

residing at: Bala Cynwyd, PA

(Notary Seal)

My commission expires: December 18, 2016

I, Edward Sayago, Corporate Secretary of PHILADELPHIA INDEMNITY INSURANCE COMPANY, do herby certify that the foregoing resolution of the Board of Directors and this Power of Attorney issued pursuant thereto on this 10TH day of June 2013 true and correct and are still in full force and effect. I do further certify that Robert D. O'Leary Jr., who executed the Power of Attorney as President, was on the date of execution of the attached Power of Attorney the duly elected President of PHILADELPHIA INDEMNITY INSURANCE COMPANY,

In Testimony Whereof I have subscribed my name and affixed the facsimile seal of each Company this 26th day of July, 2016.

Edward Sayago, Corporate Secretary
PHILADELPHIA INDEMNITY INSURANCE COMPANY

Bond No. CE11510700836
Executed in Sextuplet

SECTION 00615

PAYMENT BOND

KNOW ALL MEN BY THESE PRESENTS: That we GFM Enterprises, Inc.
(Name of Contractor)
a Corporation hereinafter called "Principal" and
(Corporation, Partnership, Joint Venture, Limited Liability Company, or Individual)
Philadelphia Indemnity Insurance* of Bala Cynwyd, State of Pennsylvania
*Company (Surety) (City) (State)
hereinafter called "Surety" and licensed by the State Division of Insurance to do business under the laws of the Commonwealth of Massachusetts are held and firmly bound to the Town of Truro Massachusetts, hereinafter called "Owner," in the penal sum of Two hundred eighteen thousand Dollars and Zero Cents ($218,000.00) in lawful money of the United States, for the payment of which sum well and truly to be made, we bind ourselves, our heirs, executors, administrators and successors, jointly and severally, firmly by these presents.

THE CONDITION OF THIS OBLIGATION is such that Whereas, the Principal entered into a certain contract with the Owner, dated the _____ day of _____, 2016, a copy of which is hereto attached and made a part hereof for the construction described as follows:

TRURO SANITARY LANDFILL CORRECTIVE ACTIONS

NOW, THEREFORE, if the Principal shall promptly make payment to all persons, firms, subcontractors, and corporations furnishing materials for or performing labor in the prosecution of the work provided for in such contract, and any authorized extension or modification thereof, including all amounts due for materials, lubricants, oil, gasoline, repairs on machinery, equipment and tools, consumed or used in connection with the construction of such work, and all insurance premiums on said work, and for all labor, performed in such work whether by subcontractor or otherwise, then this obligation shall be void; otherwise to remain in full force and effect.

PROVIDED, FURTHER, that the said Surety, for value received hereby stipulates and agrees that no change, extension of time, alteration or addition to the terms of the contract or to the work to be performed thereunder or the specifications accompanying the same shall in any way affect its obligation on this bond, and it does hereby waive notice of any such change, extension of time, alteration or addition to the terms of this contract or to the work or to the specifications. The Surety Company providing the bond shall have a rating of A or better within the Best Key Rating Guide.

PROVIDED, FURTHER, that no final settlement between the Owner and the Contractor shall abridge the right of any beneficiary hereunder, whose claim may be unsatisfied.

IN WITNESS WHEREOF, this instrument is executed in six (6) counterparts, each one of which shall be deemed an original, this the 26th day of July, 2016.

ATTEST:

GFM Enterprises, Inc.
Principal

By J. Morris
Signature

JENNIFER MORRIS-CEO
Name and Title

2 George Holbrook Way
Address

Harwich, MA 02645
City and State

Megan Spawn
Witness as to Principal Signature

MEGAN SPAWN - ASSISTANT
Name and Title

602 SEA MEADOW LANE
Address

BREWSTER, MA 02631
City and State

(SEAL)

ATTEST:

Philadelphia Indemnity Insurance Company
Surety

By
Attorney-in-Fact Signature

Steven A. Swartz, Attorney-in-fact
Name and Title

One Bala Plaza Suite 100
Address

Bala Cynwyd, PA 19004
City and State

Kandis Gregory
Witness as to Surety Signature

Kandis Gregory, AVP Underwriting
Name and Title

1100 Via Callejon Suite A
Address

San Clemente, CA 92673
City and State

(SEAL)

NOTE: Date of Bond must not be prior to date of Contract. If Contractor is a Partnership, all partners should execute Bond.

END OF SECTION

O:\Truro MA\Landfill Certification - 2011\Specs\00615-Payment Bond.docx

California All-Purpose Certificate of Acknowledgment

A notary public or other officer completing this certificate verifies only the identity of the individual who signed the document to which this certificate is attached, and not the truthfulness, accuracy, or validity of that document.

State of California

County of Orange

S.S.

On July 26, 2016 before me, Debbie McGilligan, Notary Public,

Name & Notary Public Title

personally appeared Steven A. Swartz

Name(s) of Signer(s)

N/A

Name(s) of Signer(s)

who proved to me on the basis of satisfactory evidence to be the person(s) whose name(s) is/~~are~~ subscribed to the within instrument and acknowledged to me that he/~~she/they~~ executed the same in his/~~her/their~~ authorized capacity(~~ies~~), and that by his/~~her/their~~ signature(s) on the instrument the person(s), or the entity upon behalf of which the person(s) acted, executed the instrument.

I certify under PENALTY OF PERJURY under the laws of the State of California that the foregoing paragraph is true and correct.

WITNESS my hand and official seal.

Signature of Notary Public

DEBBIE MCGILLIGAN
Commission # 1994032
Notary Public - California
Orange County
My Comm. Expires Oct 14, 2016

Seal

OPTIONAL INFORMATION

Although this information in this section is not required by law, it could prevent fraudulent removal and reattachment of this acknowledgment to an unauthorized document and may prove useful to persons relying on the attached document.

Description of Attached Document

The preceding Certificate of Acknowledgment is attached to a document titled/for the purpose of Executed in Sextuplet Payment Bond No. CE11510700836,

containing 2 pages, and dated July 26, 2016.

The signer(s) capacity or authority is/are as:

- ☐ Individual(s)
- ☒ Attorney-in-fact
- ☐ Corporate Officer(s) _____ (Title(s))
- ☐ Guardian/Conservator
- ☐ Partner - Limited/General
- ☐ Trustee(s)
- ☐ Other: _____

representing: Philadelphia Indemnity Insurance Company

(Name of Person(s) or Entity(ies) Represented)

Additional Information

Method of Signer Identification

Proved to me on the basis of satisfactory evidence:

☐ form(s) of identification ☐ credible witness(es)

Notarial event is detailed in notary journal on:

Page # _____ Entry # _____

Notary contact: _____

Other

☐ Additional Signer ☐ Signer(s) Thumbprints(s)

☐ _____

© 2009-2015 Notary Learning Center - All Rights Reserved You can purchase copies of this form from our web site at: www.TheNotarysStore.com

PHILADELPHIA INDEMNITY INSURANCE COMPANY
231 St. Asaph's Rd., Suite 100
Bala Cynwyd, PA 19004-0950

Power of Attorney

KNOW ALL PERSONS BY THESE PRESENTS: That **PHILADELPHIA INDEMNITY INSURANCE COMPANY** (the Company), a corporation organized and existing under the laws of the Commonwealth of Pennsylvania, does hereby constitute and appoint **Steven A. Swartz, Kelly Specht, Lorie Mandel, and Nicki Swartz, Michael Herranen and Thomas C. Buckner of the City of San Clemente, State of California of South Coast Surety**, its true and lawful Attorney-in-fact with full authority to execute on its behalf bonds, undertakings, recognizances and other contracts of indemnity and writings obligatory in the nature thereof, issued in the course of its business and to bind the Company thereby, in an amount not to exceed **$25,000,000.00**.

This Power of Attorney is granted and is signed and sealed by facsimile under and by the authority of the following Resolution adopted by the Board of Directors of PHILADELPHIA INDEMNITY INSURANCE COMPANY at a meeting duly called the 1st day of July, 2011.

RESOLVED: That the Board of Directors hereby authorizes the President or any Vice President of the Company to: (1) Appoint Attorney(s) in Fact and authorize the Attorney(s) in Fact to execute on behalf of the Company bonds and undertakings, contracts of indemnity and other writings obligatory in the nature thereof and to attach the seal of the Company thereto; and (2) to remove, at any time, any such Attorney-in-Fact and revoke the authority given. And, be it

FURTHER RESOLVED: That the signatures of such officers and the seal of the Company may be affixed to any such Power of Attorney or certificate relating thereto by facsimile, and any such Power of Attorney so executed and certified by facsimile signatures and facsimile seal shall be valid and biding upon the Company in the future with the respect to any bond or undertaking to which it is attached.

IN TESTIMONY WHEREOF, PHILADELPHIA INDEMNITY INSURANCE COMPANY HAS CAUSED THIS INSTRUMENT TO BE SIGNED AND ITS CORPORATE SEALTO BE AFFIXED BY ITS AUTHORIZED OFFICE THIS 10TH DAY OF JUNE 2013.

(Seal)

Robert D. O'Leary Jr., President & CEO
Philadelphia Indemnity Insurance Company

On this 10th day of June 2013, before me came the individual who executed the preceding instrument, to me personally known, and being by me duly sworn said that he is the therein described and authorized officer of the **PHILADELPHIA INDEMNITY INSURANCE COMPANY**; that the seal affixed to said instrument is the Corporate seal of said Company; that the said Corporate Seal and his signature were duly affixed.

COMMONWEALTH OF PENNSYLVANIA
Notarial Seal
Kimberly A. Kessleski, Notary Public
Lower Merion Twp. Montgomery County
My Commission Expires Dec. 18, 2016
MEMBER, PENNSYLVANIA ASSOCIATION OF NOTARIES

Notary Public: _____

residing at: Bala Cynwyd, PA

(Notary Seal)

My commission expires: December 18, 2016

I, Edward Sayago, Corporate Secretary of PHILADELPHIA INDEMNITY INSURANCE COMPANY, do herby certify that the foregoing resolution of the Board of Directors and this Power of Attorney issued pursuant thereto on this 10TH day of June 2013 true and correct and are still in full force and effect. I do further certify that Robert D. O'Leary Jr., who executed the Power of Attorney as President, was on the date of execution of the attached Power of Attorney the duly elected President of PHILADELPHIA INDEMNITY INSURANCE COMPANY,

In Testimony Whereof I have subscribed my name and affixed the facsimile seal of each Company this 26th day of February, 2016.

Edward Sayago, Corporate Secretary
PHILADELPHIA INDEMNITY INSURANCE COMPANY

ACORD®

CERTIFICATE OF LIABILITY INSURANCE

DATE (MM/DD/YYYY) 08/10/2016

THIS CERTIFICATE IS ISSUED AS A MATTER OF INFORMATION ONLY AND CONFERS NO RIGHTS UPON THE CERTIFICATE HOLDER. THIS CERTIFICATE DOES NOT AFFIRMATIVELY OR NEGATIVELY AMEND, EXTEND OR ALTER THE COVERAGE AFFORDED BY THE POLICIES BELOW. THIS CERTIFICATE OF INSURANCE DOES NOT CONSTITUTE A CONTRACT BETWEEN THE ISSUING INSURER(S), AUTHORIZED REPRESENTATIVE OR PRODUCER, AND THE CERTIFICATE HOLDER.

IMPORTANT: If the certificate holder is an ADDITIONAL INSURED, the policy(ies) must be endorsed. If SUBROGATION IS WAIVED, subject to the terms and conditions of the policy, certain policies may require an endorsement. A statement on this certificate does not confer rights to the certificate holder in lieu of such endorsement(s).

PRODUCER
Duarte & Downey Insurance Agency
12 Truro Center Rd.
PO Box 2016
Truro, MA 02666

CONTACT NAME: Laura J Murphy
PHONE (A/C, No, Ext): (508) 349-6326 FAX (A/C, No): (508) 349-0029
E-MAIL ADDRESS:

INSURER(S) AFFORDING COVERAGE	NAIC #
INSURER A :	
INSURER B :	
INSURER C : ARBELLA PROTECTION INSURANCE CO	
INSURER D :	
INSURER E : HARTFORD INSURANCE COMPANY	
INSURER F :	

INSURED
GFM ENTERPRISES
2 GEORGE HOLBROOK WAY
HARWICH, MA 02645

COVERAGES CERTIFICATE NUMBER: REVISION NUMBER:

THIS IS TO CERTIFY THAT THE POLICIES OF INSURANCE LISTED BELOW HAVE BEEN ISSUED TO THE INSURED NAMED ABOVE FOR THE POLICY PERIOD INDICATED. NOTWITHSTANDING ANY REQUIREMENT, TERM OR CONDITION OF ANY CONTRACT OR OTHER DOCUMENT WITH RESPECT TO WHICH THIS CERTIFICATE MAY BE ISSUED OR MAY PERTAIN, THE INSURANCE AFFORDED BY THE POLICIES DESCRIBED HEREIN IS SUBJECT TO ALL THE TERMS, EXCLUSIONS AND CONDITIONS OF SUCH POLICIES. LIMITS SHOWN MAY HAVE BEEN REDUCED BY PAID CLAIMS.

INSR LTR	TYPE OF INSURANCE	ADDL INSD	SUBR WVD	POLICY NUMBER	POLICY EFF (MM/DD/YYYY)	POLICY EXP (MM/DD/YYYY)	LIMITS	
	COMMERCIAL GENERAL LIABILITY CLAIMS-MADE OCCUR GEN'L AGGREGATE LIMIT APPLIES PER: POLICY PRO-JECT LOC OTHER:						EACH OCCURRENCE	$
							DAMAGE TO RENTED PREMISES (Ea occurrence)	$
							MED EXP (Any one person)	$
							PERSONAL & ADV INJURY	$
							GENERAL AGGREGATE	$
							PRODUCTS - COMP/OP AGG	$
								$
C	AUTOMOBILE LIABILITY ANY AUTO ✓ ALL OWNED AUTOS HIRED AUTOS ✓ SCHEDULED AUTOS NON-OWNED AUTOS	Y		1020002571	7/22/2016	7/22/2017	COMBINED SINGLE LIMIT (Ea accident)	$ 1,000,000
							BODILY INJURY (Per person)	$
							BODILY INJURY (Per accident)	$
							PROPERTY DAMAGE (Per accident)	$
								$
	UMBRELLA LIAB OCCUR EXCESS LIAB CLAIMS-MADE DED RETENTION $						EACH OCCURRENCE	$
							AGGREGATE	$
								$
E	WORKERS COMPENSATION AND EMPLOYERS' LIABILITY ANY PROPRIETOR/PARTNER/EXECUTIVE OFFICER/MEMBER EXCLUDED? Y/N N (Mandatory in NH) If yes, describe under DESCRIPTION OF OPERATIONS below	N / A		6S6OUB5824C91606	10/31/2015	10/31/2016	PER STATUTE OTH-ER	
							E.L. EACH ACCIDENT	$ 500,000
							E.L. DISEASE - EA EMPLOYEE	$ 500,000
							E.L. DISEASE - POLICY LIMIT	$ 500,000

DESCRIPTION OF OPERATIONS / LOCATIONS / VEHICLES (ACORD 101, Additional Remarks Schedule, may be attached if more space is required)

OPERATIONS PERFORMED BY THE NAMED INSURED AS PROVIDED BY TERMS & CONDITIONS OF THE POLICY

Operations as performed by terms & conditions in the policy

Town of Truro and Weston & Sampson additional insured as respects Liability performed by named insured

CERTIFICATE HOLDER

Town of Truro
Truro Town Hall
PO Box 2030
Truro, Ma. 02666

CANCELLATION

SHOULD ANY OF THE ABOVE DESCRIBED POLICIES BE CANCELLED BEFORE THE EXPIRATION DATE THEREOF, NOTICE WILL BE DELIVERED IN ACCORDANCE WITH THE POLICY PROVISIONS.

AUTHORIZED REPRESENTATIVE

© 1988-2014 ACORD CORPORATION. All rights reserved.
The ACORD name and logo are registered marks of ACORD

ACORD®

CERTIFICATE OF LIABILITY INSURANCE

DATE (MM/DD/YYYY): 7/28/2016

THIS CERTIFICATE IS ISSUED AS A MATTER OF INFORMATION ONLY AND CONFERS NO RIGHTS UPON THE CERTIFICATE HOLDER. THIS CERTIFICATE DOES NOT AFFIRMATIVELY OR NEGATIVELY AMEND, EXTEND OR ALTER THE COVERAGE AFFORDED BY THE POLICIES BELOW. THIS CERTIFICATE OF INSURANCE DOES NOT CONSTITUTE A CONTRACT BETWEEN THE ISSUING INSURER(S), AUTHORIZED REPRESENTATIVE OR PRODUCER, AND THE CERTIFICATE HOLDER.

IMPORTANT: If the certificate holder is an ADDITIONAL INSURED, the policy(ies) must be endorsed. If SUBROGATION IS WAIVED, subject to the terms and conditions of the policy, certain policies may require an endorsement. A statement on this certificate does not confer rights to the certificate holder in lieu of such endorsement(s).

PRODUCER
Safe Harbor Insurance Agency, Inc.
PO Box 1680
Brewster MA 02631

CONTACT NAME: Colleen Ormsby
PHONE (A/C, No, Ext): (508) 896-3771 FAX (A/C, No): (508) 896-9276
E-MAIL ADDRESS: colleen@sh-ins.cc

INSURER(S) AFFORDING COVERAGE	NAIC #
INSURER A: Evanston Insurance Company	
INSURER B: Western World	
INSURER C:	
INSURER D:	
INSURER E:	
INSURER F:	

INSURED
GFM Enterprises, Inc.
2 George Holbrook Way
Harwich MA 02645

COVERAGES CERTIFICATE NUMBER: CL1672800773 REVISION NUMBER:

THIS IS TO CERTIFY THAT THE POLICIES OF INSURANCE LISTED BELOW HAVE BEEN ISSUED TO THE INSURED NAMED ABOVE FOR THE POLICY PERIOD INDICATED. NOTWITHSTANDING ANY REQUIREMENT, TERM OR CONDITION OF ANY CONTRACT OR OTHER DOCUMENT WITH RESPECT TO WHICH THIS CERTIFICATE MAY BE ISSUED OR MAY PERTAIN, THE INSURANCE AFFORDED BY THE POLICIES DESCRIBED HEREIN IS SUBJECT TO ALL THE TERMS, EXCLUSIONS AND CONDITIONS OF SUCH POLICIES. LIMITS SHOWN MAY HAVE BEEN REDUCED BY PAID CLAIMS.

INSR LTR	TYPE OF INSURANCE	ADDL INSD	SUBR WVD	POLICY NUMBER	POLICY EFF (MM/DD/YYYY)	POLICY EXP (MM/DD/YYYY)	LIMITS	
B	X COMMERCIAL GENERAL LIABILITY CLAIMS-MADE / X OCCUR GEN'L AGGREGATE LIMIT APPLIES PER: POLICY / X PRO-JECT / LOC OTHER:	X	Y	Binder 369660	08/03/2016	08/03/2017	EACH OCCURRENCE	$ 1,000,000
							DAMAGE TO RENTED PREMISES (Ea occurrence)	$ 100,000
							MED EXP (Any one person)	$ 5,000
							PERSONAL & ADV INJURY	$ 1,000,000
							GENERAL AGGREGATE	$ 2,000,000
							PRODUCTS - COMP/OP AGG	$ 2,000,000
							Deductible BI & PD	$ 500
	AUTOMOBILE LIABILITY ANY AUTO ALL OWNED AUTOS / SCHEDULED AUTOS HIRED AUTOS / NON-OWNED AUTOS						COMBINED SINGLE LIMIT (Ea accident)	$
							BODILY INJURY (Per person)	$
							BODILY INJURY (Per accident)	$
							PROPERTY DAMAGE (Per accident)	$
								$
A	X UMBRELLA LIAB / X OCCUR EXCESS LIAB / CLAIMS-MADE DED / X RETENTION $ 10,000	X	Y	2155318	07/28/2016	07/28/2017	EACH OCCURRENCE	$ 5,000,000
							AGGREGATE	$ 5,000,000
								$
	WORKERS COMPENSATION AND EMPLOYERS' LIABILITY ANY PROPRIETOR/PARTNER/EXECUTIVE OFFICER/MEMBER EXCLUDED? Y/N (Mandatory in NH) If yes, describe under DESCRIPTION OF OPERATIONS below		N/A				PER STATUTE / OTH-ER	
							E.L. EACH ACCIDENT	$
							E.L. DISEASE - EA EMPLOYEE	$
							E.L. DISEASE - POLICY LIMIT	$

DESCRIPTION OF OPERATIONS / LOCATIONS / VEHICLES (ACORD 101, Additional Remarks Schedule, may be attached if more space is required)

Operations performed by the Named Insured as provided by the terms and conditions of the policy.

Town of Truro and Weston & Sampson are Additional Insured as respects to Liability performed by the Named Insured on the Truro Sanitary Landfill Action project.

CERTIFICATE HOLDER

Town of Truro
Truro Town Hall
P.O. Box 2030
Truro, MA 02666

CANCELLATION

SHOULD ANY OF THE ABOVE DESCRIBED POLICIES BE CANCELLED BEFORE THE EXPIRATION DATE THEREOF, NOTICE WILL BE DELIVERED IN ACCORDANCE WITH THE POLICY PROVISIONS.

AUTHORIZED REPRESENTATIVE

Colleen Ormsby/COLLEE Colleen Ormsby

© 1988-2014 ACORD CORPORATION. All rights reserved.

TOWN OF TRURO

Board of Selectmen Agenda Item

DEPARTMENT: Administration

REQUESTOR: Noelle Scoullar, Executive Assistant

REQUESTED MEETING DATE: September 13, 2016

ITEM: Consent for Generator Replacement (AT&T) on Cell Tower at 344 Route 6

EXPLANATION: AT&T has authorized CCATT (Crown Castle) to contact the Town of Truro to request consent of modification of existing equipment:

1. AT&T plans to modify their equipment at the wireless communication facility by replacing the existing 230kw generator with a new 100kw generator.

As part of the lease with Crown Castle, AT&T is required to obtain the Town's consent prior to doing any work. Signing this consent letter does not eliminate the need for the customer to go through any jurisdictional and/or zoning/permitting procedures that may be required.

FINANCIAL SOURCE (IF APPLICABLE): N/A

IMPACT IF NOT APPROVED: The work will not move forward.

SUGGESTED ACTION: *MOTION TO approve the consent for modification with AT&T and to authorize the Chair to sign.*

ATTACHMENTS:

1. Consent for Modification (AT&T)

Consent Agenda Item: 6A2

August 9, 2016

VIA: Email: Rae Ann Palmer
<rpalmer@truro-ma.gov>

Town of Truro
PO Box 2012
Truro, MA 02666

Re: Site ID: 841273
Site Name: Truro
Site Location: 344 Route 6, N Truro, MA 02652
Wireless Communications Facilities Lease Agreement dated March 7, 2000, as modified by Assignment and Assumption of Lease Agreement dated June 9, 2004 ("Lease"), between The Town of Truro, Massachusetts ("Landlord") and NCWPCS MPL 24-Year Sites Tower Holdings LLC, successor in interest to Cingular Wireless ("Tenant"), by CCATT LLC ("CCATT"), Tenant's Attorney in Fact
Consent for Generator Replacement (AT&T)

Dear Landlord:

Pursuant to an agreement between NCWPCS MPL 24 - Year Sites Tower Holdings LLC, successor in interest to New Cingular Wireless PCS, LLC ("AT&T") and CCATT LLC ("CCATT"), CCATT manages and operates the tower site that is subject to the Lease on behalf of AT&T. CCATT is a Crown Castle company. CCATT and its affiliates and subsidiaries own and operate shared wireless communication facilities.

In order to better serve the public and minimize the amount of towers in an area where this property is located, AT&T plans to modify their equipment at the wireless communication facility by replacing the existing 230kw generator with a new 100kw generator.

AT&T has authorized CCATT to contact you and request consent to the modification of existing equipment. Pursuant to Paragraph 1 of the Lease, AT&T is required to obtain your consent. Signing this consent letter does not eliminate the need for the customer to go through any jurisdictional and/or zoning/permitting procedures that may be required.

Please indicate your consent by executing this letter where indicated below and return one of same to me via email at the address provided below.

Thank you for your continued cooperation with Crown Castle. If you have any questions concerning this issue, please contact me at (980) 209-8236 or heather.simeone@crowncastle.com.

Yours truly,

Heather Simeone

Heather Simeone
Real Estate Specialist - East Area

Agreed and accepted this _ day of _ , 20_

_____
(Lessor's signature)

_____
(Printed Name)

GENERATOR INSTALLATION PROJECT

at&t MOBILITY

AT&T MOBILITY
SITE NUMBER: MA1106
SITE NAME: TRURO - FA# 10034571
PROPERTY OWNER.: CROWN CASTLE BU #841273

SHEET	DRAWING INDEX	REV	DATE
T1	TITLE SHEET	A	06/21/16
C1	GENERAL NOTES	A	06/21/16
C2	SITE PLAN	A	06/21/16
C3	GENERATOR PLANS AND ELEVATIONS	A	06/21/16
C4	SIGNAGE	A	06/21/16
C5	ALARM AND CONTROL DETAILS	A	06/21/16
E1	GROUNDING AND ELECTRICAL NOTES	A	06/21/16
E2	GROUNDING AND ELECTRICAL PLAN	A	06/21/16
E3	GROUNDING AND ELECTRICAL DETAILS	A	06/21/16
S1	FOUNDATION PLAN AND SECTIONS	A	06/21/16

DIRECTIONS:

FROM 5841 BRIDGE ST, EAST SYRACUSE, NY 13057:
GET ON I-690 E IN EAST SYRACUSE FROM BRIDGE ST.
TAKE I-90 E AND I-495 S TO US-6 E IN ORLEANS.
AT THE TRAFFIC CIRCLE, TAKE THE 2ND EXIT AND STAY ON US-6 E.
IN 18.4 MI, TURN LEFT INTO POLICE DEPT.
SITE WILL BE BEHIND POLICE DEPARTMENT.

VICINITY MAP

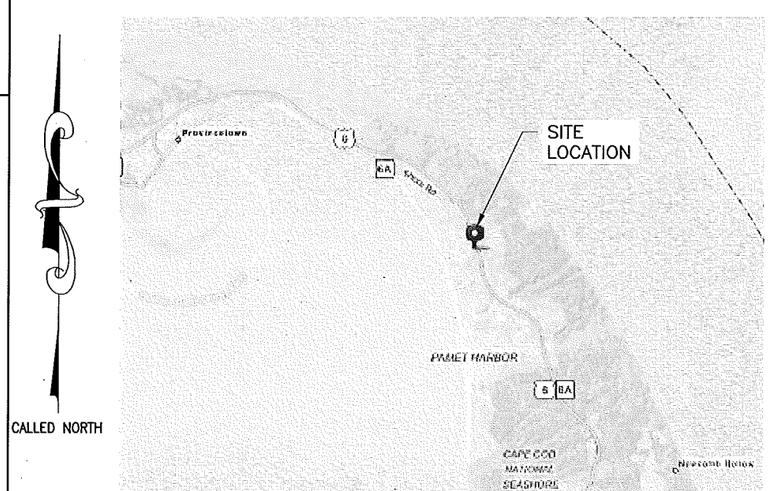

CALLED NORTH

NOT TO SCALE

SITE INFORMATION

SCOPE OF WORK:	THE INSTALLATION OF NEW GENERATOR ON NEW CONCRETE PAD.
SITE ADDRESS:	344 US ROUTE #6 TRURO, MA 02666
OWNER:	CROWN CASTLE 2000 CORPORATE DRIVE CANONSBURG, PA 15317
CONTACT PERSON:	LEASING
APPLICANT:	AT&T MOBILITY 5841 BRIDGE STREET EAST SYRACUSE, NY 01357
LATITUDE (NAD 83):	42.0220°
LONGITUDE (NAD 83):	-70.0750°
CURRENT USE:	TELECOMMUNICATIONS FACILITY
PROPOSED USE:	TELECOMMUNICATIONS FACILITY
JURISDICTION:	BARNSTABLE COUNTY

SITE QUALIFICATION PARTICIPANTS

	NAME	COMPANY	NUMBER
A/E	HUGO JUSTINIANO	FDH VELOCITEL	(770) 645-5900
SAC	STEPH ZARICHNY	FDH VELOCITEL	(315) 414-0510
CM	SUNIL SCHNEIDER	FDH VELOCITEL	(315) 414-0510

REVIEWED BY:

AT&T OPERATIONS DATE

FDH VELOCITEL DATE

APPROVED BY:

OWNER DATE

MUNICIPAL DATE

PRELIMINARY NOT FOR CONSTRUCTION

IT IS A VIOLATION OF LAW FOR ANY PERSON UNLESS THEY ARE ACTING UNDER THE DIRECTION OF A LICENSED PROFESSIONAL ENGINEER TO ALTER THIS DOCUMENT. UNLESS EXPLICITLY AGREED TO BY THE ENGINEER IN WRITING, THE ENGINEER DISCLAIMS ALL LIABILITY ASSOCIATED WITH THE REUSE, ALTERATION OR MODIFICATION OF THE CONTENTS HEREIN.

FDH VELOCITEL
ENGINEERING INNOVATION
6103 E. MOLLOY ROAD
EAST SYRACUSE, NY 13057
PHONE - (315)414-0510
FAX - (315)414-0509

PREPARED FOR:

at&t MOBILITY
5841 BRIDGE STREET
EAST SYRACUSE, NY 13057

SITE NO. MA1106
TRURO
FA# 10034571
344 US ROUTE #6
TRURO, MA 02666

NO.	DATE	REVISIONS	BY	CK'D	APP'D
A	06/21/16	ISSUED FOR REVIEW	SEP	HJ	–

SCALE: | DESIGNED: –

TITLE SHEET

JOB #	DRAWING NUMBER	REV
207-A10034571G	T1	A

GENERAL NOTES:

1. THE PROPOSED FACILITY WILL BE UNMANNED AND DOES NOT REQUIRE POTABLE WATER OR SEWER SERVICE AND IS NOT FOR HUMAN HABITAT. (NO HANDICAP ACCESS IS REQUIRED).
2. OCCUPANCY IS LIMITED TO PERIODIC MAINTENANCE AND INSPECTION, APPROXIMATELY 2 TIMES PER MONTH, BY at&t TECHNICIANS.
3. NO SMOKE, DUST, OR ODOR WILL RESULT FROM THIS PROPOSAL.
4. OUTDOOR STORAGE AND SOLID WASTE CONTAINERS ARE NOT PROPOSED.
5. ALL MATERIAL SHALL BE FURNISHED AND WORK SHALL BE PERFORMED IN ACCORDANCE WITH THE at&t SYSTEM GROUNDING STANDARD DATED JUNE 2011 TECHNICAL SPECIFICATION FOR CONSTRUCTION OF GSM/GPRS WIRELESS SITES, "TECHNICAL SPECIFICATION FOR FACILITY GROUNDING". IN CASE OF A CONFLICT BETWEEN THE CONSTRUCTION SPECIFICATION AND THE DRAWINGS, THE DRAWINGS SHALL GOVERN.
6. SUBCONTRACTOR SHALL BE RESPONSIBLE FOR REPAIRING ANY DAMAGE CAUSED BY THE CONSTRUCTION OPERATION.
7. SUBCONTRACTOR SHALL BE RESPONSIBLE FOR OBTAINING ALL PERMITS AND INSPECTIONS REQUIRED FOR CONSTRUCTION.
8. SUBCONTRACTOR SHALL REMOVE ALL TRASH AND DEBRIS FROM THE SITE ON A DAILY BASIS.
9. INFORMATION SHOWN ON THESE DRAWINGS WAS OBTAINED FROM SITE VISITS AND SKETCHES PROVIDED BY THE SITE AUDIT FIRM. SUBCONTRACTOR SHALL NOTIFY at&t OF ANY DISCREPANCIES PRIOR TO ORDERING MATERIAL OR PROCEEDING WITH CONSTRUCTION.
10. NO WHITE STROBIC LIGHTS ARE PERMITTED. LIGHTING, IF REQUIRED, WILL MEET FAA STANDARDS AND REQUIREMENTS.
11. ALL SIGNS SHALL BE FURNISHED AND INSTALLED AT ALL at&t WIRELESS SERVICES SITES IN ACCORDANCE WITH SPECIFICATION at&t SYSTEM GROUNDING DATED JUNE 2011.
12. NO ADDITIONAL PARKING TO BE PROPOSED. EXISTING ACCESS AND PARKING TO BE USED.
13. CONTRACTOR SHALL COMPLY WITH ALL FEDERAL, STATE, LOCAL, OSHA AND AT&T REGULATIONS PERTAINING TO THE USE OF SAFETY ATTIRE (HARD HATS, GLOVES SAFETY GLASSES, ETC.) AND SHALL MAINTAIN A NEAT AND ORDERLY JOB SITE TO MINIMIZE RISK OF INJURY. ALL EQUIPMENT USED SHALL BE PROPERLY MAINTAINED AND IN GOOD WORKING CONDITION TO ENSURE A SAFE JOB SITE.

GENERAL NOTES:

1. FOR THE PURPOSE OF CONSTRUCTION DRAWINGS, THE FOLLOWING DEFINITIONS SHALL APPLY:
   CONTRACTOR – CONTRACTOR
   SUBCONTRACTOR – GENERAL CONTRACTOR (CONSTRUCTION)
   OWNER – at&t WIRELESS
2. ALL SITE WORK SHALL BE COMPLETED AS INDICATED ON THE DRAWINGS AND PROJECT SPECIFICATIONS.
3. DRAWINGS PROVIDED HERE ARE NOT TO BE SCALED AND ARE INTENDED TO SHOW OUTLINE ONLY.
4. ALL MATERIALS FURNISHED AND INSTALLED SHALL BE IN STRICT ACCORDANCE WITH ALL APPLICABLE CODES, REGULATIONS, AND ORDINANCES. SUBCONTRACTOR SHALL ISSUE ALL APPROPRIATE NOTICES AND COMPLY WITH ALL LAWS, ORDINANCES, RULES, REGULATIONS, AND LAWFUL ORDERS OF ANY PUBLIC AUTHORITY REGARDING THE PERFORMANCE OF THE WORK.
5. ALL WORK CARRIED OUT SHALL COMPLY WITH ALL APPLICABLE MUNICIPAL AND UTILITY COMPANY SPECIFICATIONS AND LOCAL JURISDICTIONAL CODES, ORDINANCES AND APPLICABLE REGULATIONS.
6. UNLESS NOTED OTHERWISE, THE WORK SHALL INCLUDE FURNISHING MATERIALS, EQUIPMENT, APPURTENANCES, AND LABOR NECESSARY TO COMPLETE ALL INSTALLATIONS AS INDICATED ON THE DRAWINGS.
7. THE SUBCONTRACTOR SHALL INSTALL ALL EQUIPMENT AND MATERIALS IN ACCORDANCE WITH MANUFACTURER'S RECOMMENDATIONS UNLESS SPECIFICALLY STATED OTHERWISE.
8. IF THE SPECIFIED EQUIPMENT CANNOT BE INSTALLED AS SHOWN ON THESE DRAWINGS, THE SUBCONTRACTOR SHALL PROPOSE AN ALTERNATIVE INSTALLATION SPACE FOR APPROVAL BY THE CONTRACTOR AND SITE OWNER.
9. THE SUBCONTRACTOR SHALL PROTECT EXISTING IMPROVEMENTS, PAVEMENTS, CURBS, LANDSCAPING AND STRUCTURES. ANY DAMAGED PART SHALL BE REPAIRED AT SUBCONTRACTOR'S EXPENSE TO THE SATISFACTION OF OWNER.
10. THE SUBCONTRACTOR SHALL CONTACT UTILITY LOCATING SERVICES PRIOR TO THE START OF CONSTRUCTION. CONTRACTOR IS RESPONSIBLE FOR HAVING UTILITIES LOCATED BEYOND DEMARCS IN COMPOUND THAT IS NOT MARKED BY UTILITY COMPANIES.
11. ALL EXISTING ACTIVE SEWER, WATER, GAS, ELECTRIC, AND OTHER UTILITIES WHERE ENCOUNTERED IN THE WORK, SHALL BE PROTECTED AT ALL TIMES, AND WHERE REQUIRED FOR THE PROPER EXECUTION OF THE WORK, SHALL BE RELOCATED AS DIRECTED BY ENGINEERS. EXTREME CAUTION SHOULD BE USED BY THE SUBCONTRACTOR WHEN EXCAVATING OR DRILLING PIERS AROUND OR NEAR UTILITIES. SUBCONTRACTOR SHALL PROVIDE SAFETY TRAINING FOR THE WORKING CREW. THIS WILL INCLUDE BUT NOT BE LIMITED TO A) FALL PROTECTION, B) CONFINED SPACE, C) ELECTRICAL SAFETY & D) TRENCHING & EXCAVATION.
12. ALL EXISTING INACTIVE SEWER, WATER, GAS, ELECTRIC AND OTHER UTILITIES, WHICH INTERFERE WITH THE EXECUTION OF THE WORK, SHALL BE REMOVED AND/OR CAPPED, PLUGGED OR OTHERWISE DISCONTINUED AT POINTS WHICH WILL NOT INTERFERE WITH THE EXECUTION OF THE WORK, AS DIRECTED BY THE RESPONSIBLE ENGINEER, AND SUBJECT TO THE APPROVAL OF THE OWNER AND/OR LOCAL UTILITIES.
13. THE AREAS OF THE OWNER'S PROPERTY DISTURBED BY THE WORK AND NOT COVERED BY THE TOWER, EQUIPMENT OR DRIVEWAY, SHALL BE GRADED TO A UNIFORM SLOPE, AND STABILIZED TO PREVENT EROSION.
14. SUBCONTRACTOR SHALL MINIMIZE DISTURBANCE TO EXISTING SITE DURING CONSTRUCTION. EROSION CONTROL MEASURES, IF REQUIRED DURING CONSTRUCTION, SHALL BE IN CONFORMANCE WITH THE LOCAL GUIDELINES FOR EROSION AND SEDIMENT CONTROL. VEHICLE TIRES SHALL NOT TRACK DIRT OR MUD OVER ACCESS ROADS, PROPERTY OR ONTO STATE ROADS.
15. NO FILL OR EMBANKMENT MATERIAL SHALL BE PLACED ON FROZEN GROUND. FROZEN MATERIALS, SNOW OR ICE SHALL NOT BE PLACED IN ANY FILL OR EMBANKMENT.
16. THE SUB GRADE SHALL BE COMPACTED AND BROUGHT TO A SMOOTH UNIFORM GRADE PRIOR TO FINISHED SURFACE APPLICATION.
17. THE SITE SHALL BE GRADED TO CAUSE SURFACE WATER TO FLOW AWAY FROM THE BTS EQUIPMENT.
18. MACHINE DIGGING IS NOT PERMITTED WITHIN 10FT OF MARKED OR VISIBLE UTILITIES OR WHERE FORBIDDEN BY PROPERTY OWNER.
19. IF NECESSARY, RUBBISH, STUMPS, DEBRIS, STICKS, STONES AND OTHER REFUSE SHALL BE REMOVED FROM THE SITE AND DISPOSED OF LEGALLY
20. THE SUBCONTRACTOR SHALL PROVIDE SITE SIGNAGE IN ACCORDANCE WITH OSHA REGULATIONS.
21. CONTRACTOR SHALL ENSURE COMPOUND IS SECURE WHILE WORK IS NOT BEING PERFORMED. IF FENCE IS REMOVED FOR EXPANSION, A TEMPORARY FENCE MUST BE ERECTED.
22. SUBCONTRACTOR SHALL LEAVE PREMISES IN A CLEAN CONDITION.

STRUCTURAL STEEL NOTES:

1. ALL STEEL WORK SHALL BE PAINTED IN ACCORDANCE WITH THE PROJECT SPECIFICATIONS AND IN ACCORDANCE WITH ASTM A36 UNLESS OTHERWISE NOTED.
2. ALL WELDING SHALL BE PERFORMED USING E70XX ELECTRODES AND WELDING SHALL CONFORM TO AISC AND AWS D1.1. WHERE FILLET WELD SIZES ARE NOT SHOWN, PROVIDE THE MINIMUM SIZE PER TABLE J2.4 IN THE AISC "MANUAL OF STEEL CONSTRUCTION". PAINTED SURFACES SHALL BE TOUCHED UP.
3. BOLTED CONNECTIONS SHALL BE ASTM A325 BEARING TYPE (3/4"ø) CONNECTIONS AND SHALL HAVE MINIMUM OF TWO BOLTS UNLESS NOTED OTHERWISE.
4. NON-STRUCTURAL CONNECTIONS FOR STEEL GRATING MAY USE 5/8" DIA. ASTM A 307 BOLTS UNLESS NOTED OTHERWISE.
5. INSTALLATION OF CONCRETE EXPANSION/WEDGE ANCHOR, SHALL BE PER MANUFACTURER'S WRITTEN RECOMMENDED PROCEDURE. THE ANCHOR BOLT, DOWEL OR ROD SHALL CONFORM TO MANUFACTURER'S RECOMMENDATION FOR EMBEDMENT DEPTH OR AS SHOWN ON THE DRAWINGS. NO REBAR SHALL BE CUT WITHOUT PRIOR ENGINEERING APPROVAL WHEN DRILLING HOLES IN CONCRETE. SPECIAL INSPECTIONS, REQUIRED BY GOVERNING CODES, SHALL BE PERFORMED IN ORDER TO MAINTAIN MANUFACTURER'S MAXIMUM ALLOWABLE LOADS.
6. ALL METAL WORK SHALL BE GALVANIZED IN ACCORDANCE WITH SPECIFICATION ASTM A123. ALL SHOP WELDED MEMBERS SHALL BE GALVANIZED AFTER WELDING.

CONCRETE NOTES:

1. SLAB TOLERANCE IS ±1/4".
2. ADDITIONAL ENGINEERING REVIEW IS REQUIRED IF THE PAD IS PLACED ON SOIL WITH A BEARING CAPACITY LESS THAN 2000 PSF.
3. REBAR – SEE SPECIFICATIONS
4. OVERLAP SPLICES ARE ALLOWED FOR REINFORCING BAR, USE 18" MINIMUM LAP.
5. CONCRETE COMPRESSION STRENGTH (f'c) TO BE 3000 P.S.I. MINIMUM.
6. ATTACH GENERATOR BASE TO CONCRETE PAD W/ MINIMUM (4) 1/2" DIA. HILTI KWIK BOLT TZ ANCHORS, OR APPROVED EQUAL, W/ 2" EFFECTIVE EMBED. DEPTH.

PRELIMINARY NOT FOR CONSTRUCTION

IT IS A VIOLATION OF LAW FOR ANY PERSON UNLESS THEY ARE ACTING UNDER THE DIRECTION OF A LICENSED PROFESSIONAL ENGINEER TO ALTER THIS DOCUMENT. UNLESS EXPLICITLY AGREED TO BY THE ENGINEER IN WRITING, THE ENGINEER DISCLAIMS ALL LIABILITY ASSOCIATED WITH THE REUSE, ALTERATION OR MODIFICATION OF THE CONTENTS HEREIN.

FDH VELOCITEL
ENGINEERING INNOVATION
6103 E. MOLLOY ROAD
EAST SYRACUSE, NY 13057
PHONE - (315)414-0510
FAX - (315)414-0509

PREPARED FOR:
at&t MOBILITY
5841 BRIDGE STREET
EAST SYRACUSE, NY 13057

SITE NO. MA1106
TRURO
FA# 10034571
344 US ROUTE #6
TRURO, MA 02666

NO	DATE	REVISIONS	BY	CK'D	APP'D
A	06/21/16	ISSUED FOR REVIEW	SEP	HJ	–

SCALE: | DESIGNED: | --

GENERAL NOTES

JOB #	DRAWING NUMBER	REV
207-A10034571G	C1	A

SYMBOLS AND MATERIALS

- DETAIL REFERENCE
- SECTIONS AND DETAILS
- CONCRETE
- EARTH
- GRAVEL/STONE

SITE LEGEND

- PROPERTY LINE
- LEASE LINE
- FENCE LINE

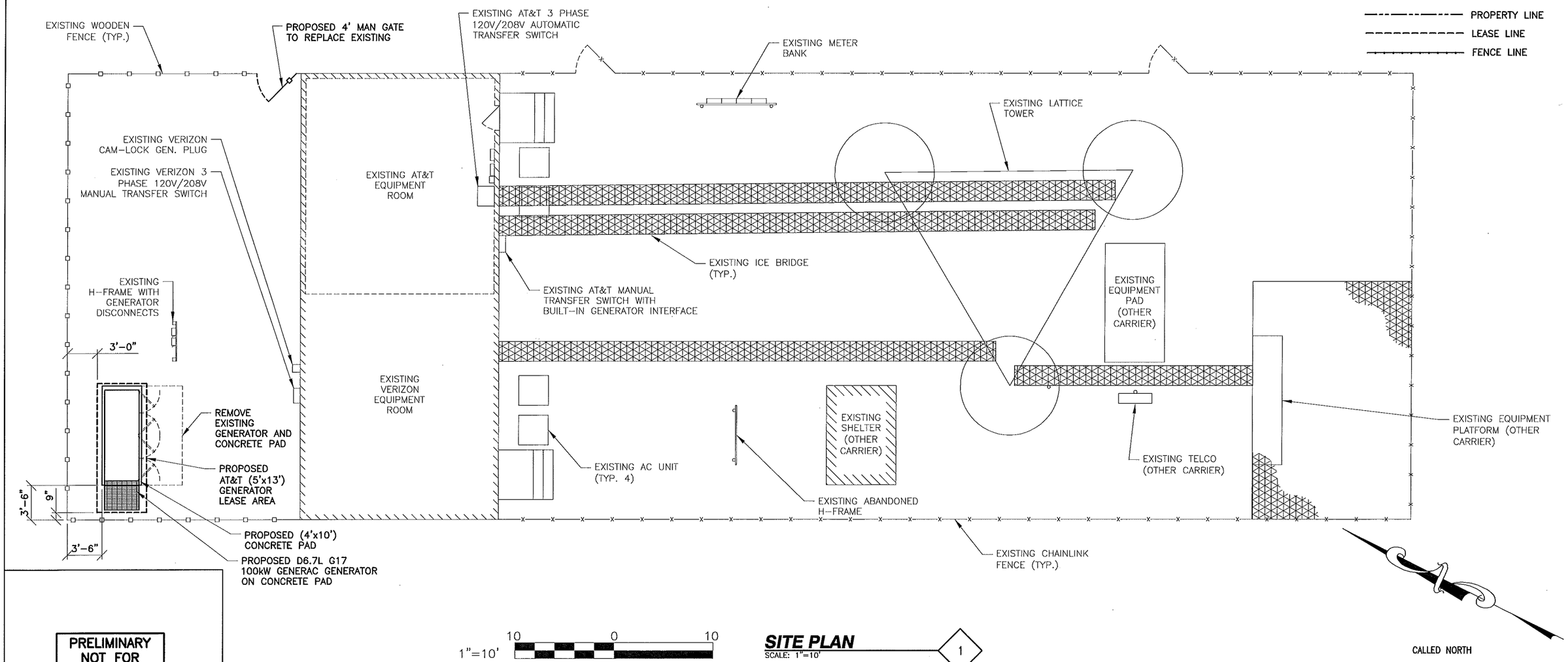

1"=10' 10 0 10

SITE PLAN 1
SCALE: 1"=10'

PRELIMINARY NOT FOR CONSTRUCTION

IT IS A VIOLATION OF LAW FOR ANY PERSON UNLESS THEY ARE ACTING UNDER THE DIRECTION OF A LICENSED PROFESSIONAL ENGINEER TO ALTER THIS DOCUMENT, UNLESS EXPLICITLY AGREED TO BY THE ENGINEER IN WRITING. THE ENGINEER DISCLAIMS ALL LIABILITY ASSOCIATED WITH THE REUSE, ALTERATION OR MODIFICATION OF THE CONTENTS HEREIN.

FDH VELOCITEL®
ENGINEERING INNOVATION
6103 E. MOLLOY ROAD
EAST SYRACUSE, NY 13057
PHONE - (315)414-0510
FAX - (315)414-0509

PREPARED FOR:
at&t MOBILITY
5841 BRIDGE STREET
EAST SYRACUSE, NY 13057

SITE NO. MA1106
TRURO
FA# 10034571
344 US ROUTE #6
TRURO, MA 02666

NO.	DATE	REVISIONS	BY	CK'D	APP'D
A	06/21/16	ISSUED FOR REVIEW	SEP	HJ	–

SCALE: | DESIGNED: --

SITE PLAN

JOB #	DRAWING NUMBER	REV
207-A10034571G	C2	A

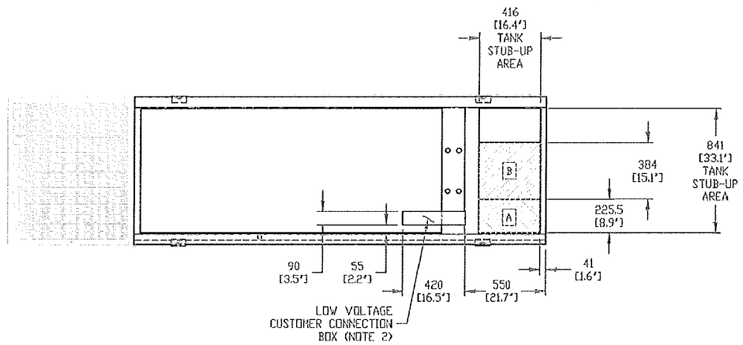

PLAN VIEW
NOT TO SCALE

1

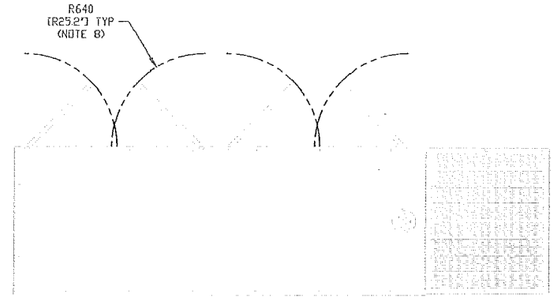

TOP VIEW
NOT TO SCALE

2

NOTES:

1. THE LEFT SIDE OF THE GENERATOR IS SERVICE ACCESSIBLE.
2. CONNECTION POINTS FOR CONTROL WIRES. BOTTOM OF LOW VOLTAGE CUSTOMER CONNECTION BOX HAS KNOCKOUTS FOR ½" AND ¾" CONDUIT FITTINGS.
3. GENERATOR MUST BE GROUNDED.
4. 12 VOLT NEGATIVE GROUND SYSTEM.
5. OPTIONAL REMOTE EMERGENCY STOP SHIPPED LOOSE WITH GENERATOR.
6. MAIN LINE CIRCUIT BREAKER (MLCB), AC LOAD LEAD CONNECTION AND AUXILIARY 120/240V CONNECTION.
7. LEVEL 2A SOUND ATTENUATED ENCLOSURE STANDARD WITH GENERATOR.
8. DOORS MUST BE ABLE TO OPEN 90 DEG. TO BE REMOVED. DOORS ARE LOCATED ON THE LEFT SIDE OF THE GENERATOR ONLY.
9. STUB-UPS: BASE TANK REQUIRES ALL STUB-UPS TO BE IN THE REAR TANK STUB-UP AREA.
10. 'A' IS THE STUB UP AREA FOR THE MLCB AND NEUTRAL CONNECTION.
11. SEE DRAWING 0C3850 FOR DUCT REMOVAL. REMOVAL OF FRONT DUCT WILL PROVIDE ACCESS TO MUFFLER.
12. 120VAC ENGINE BLOCK HEATER.
13. 350 GALLON USEABLE CAPACITY BASE TANK STANDARD WITH GENERATOR.
14. MUST ALLOW FREE FLOW OF DISCHARGE AIR AND EXHAUST. SEE SPEC SHEET FOR MINIMUM AIR FLOW AND MAXIMUM RESTRICTION REQUIREMENTS.
15. MUST ALLOW FREE FLOW OF INTAKE AIR. SEE SPEC SHEET FOR MINIMUM AIR FLOW AND MAXIMUM RESTRICTION REQUIREMENTS.
16. IT IS THE RESPONSIBILITY OF THE INSTALLATION TECHNICIAN TO ENSURE THAT THE GENERATOR INSTALLATION COMPLIES WITH ALL APPLICABLE CODES, STANDARDS, AND REGULATIONS.

WEIGHT DATA (INCLUDES WOODEN SHIPPING SKID)
ENCLOSED GENERATOR WITH EMPTY FUEL TANK – 2630kg (5800 lbs)

RECOMMENDED ELECTRICAL STUB-UPS (SEE PLAN VEIW)

DESCRIPTION	INSIDE BASE
AC LOAD LEAD CONDUIT GLAND AREA	A
1) LOW VOLTAGE CUSTOMER CONNECTION BOX FOR 120VAC GFCI OUTLET, (STANDARD BLOCK HEATER, BATTERY CHARGER AND OTHER 120 VAC OPTIONS). 2) TRANSFER SWITCH/COMMUNICATION CONDUITS. COMMUNICATIONS AND 2-WIRESTART MUST NOT BE RUN IN CONDUIT WITH AC WIRING.	B SEE NOTE 3

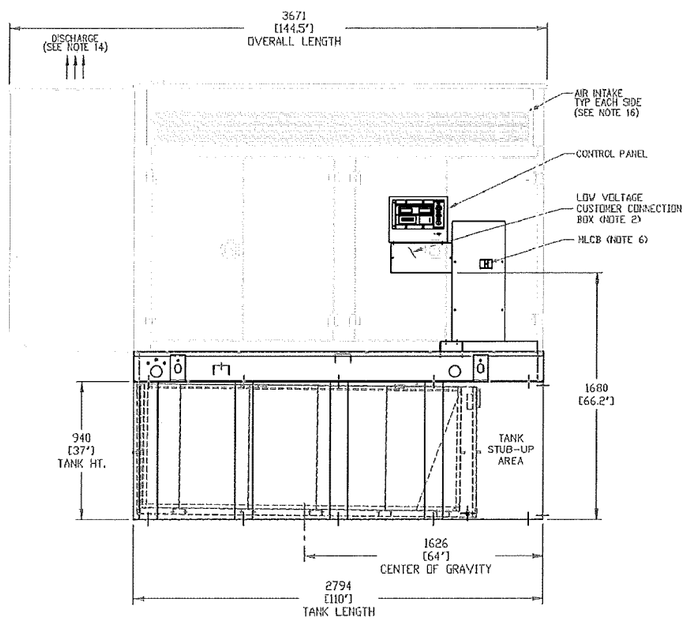

LEFT SIDE VIEW
NOT TO SCALE

3

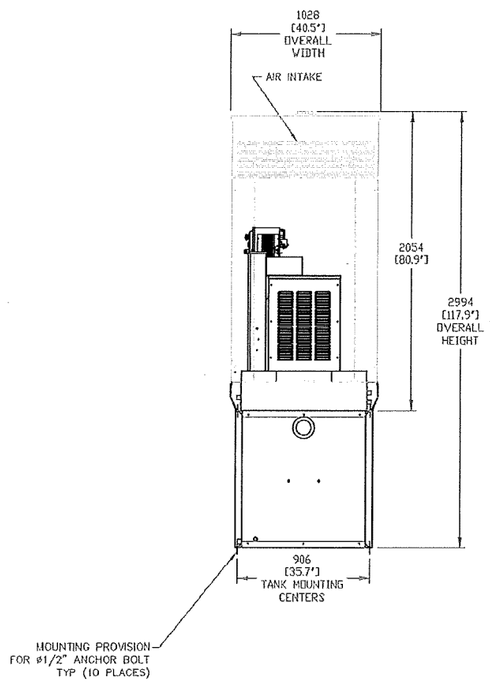

REAR VIEW
NOT TO SCALE

4

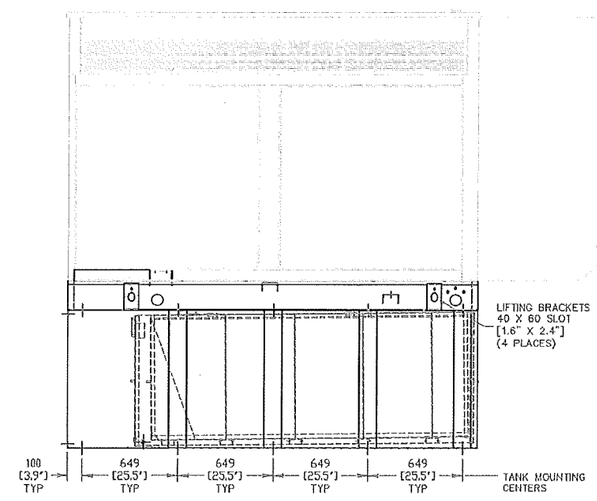

RIGHT SIDE VIEW
NOT TO SCALE

5

PRELIMINARY
NOT FOR
CONSTRUCTION

IT IS A VIOLATION OF LAW FOR ANY PERSON UNLESS THEY ARE ACTING UNDER THE DIRECTION OF A LICENSED PROFESSIONAL ENGINEER TO ALTER THIS DOCUMENT. UNLESS EXPLICITLY AGREED TO BY THE ENGINEER IN WRITING, THE ENGINEER DISCLAIMS ALL LIABILITY ASSOCIATED WITH THE REUSE, ALTERATION OR MODIFICATION OF THE CONTENTS HEREIN.

FDH VELOCITEL®
ENGINEERING INNOVATION
6103 E. MOLLOY ROAD
EAST SYRACUSE, NY 13057
PHONE - (315)414-0510
FAX - (315)414-0509

PREPARED FOR:
at&t MOBILITY
5841 BRIDGE STREET
EAST SYRACUSE, NY 13057

SITE NO. MA1106
TRURO
FA# 10034571
344 US ROUTE #6
TRURO, MA 02666

NO	DATE	REVISIONS	BY	CK'D	APP'D
A	06/21/16	ISSUED FOR REVIEW	SEP	HJ	–

SCALE: | DESIGNED: –

GENERATOR PLANS AND ELEVATIONS

JOB #	DRAWING NUMBER	REV
207-A10034571G	C3	A

NEPA 704 HAZARD IDENTIFICATION SYSTEM 15" DIAMOND W/ 6" NUMBERS

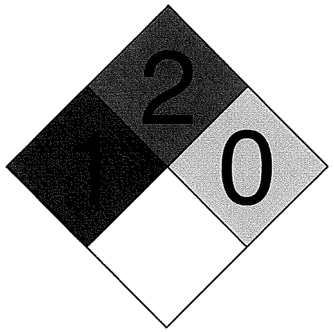

HAZARD RATINGS:

NINE O'CLOCK –	HEALTH	(BLUE BACKGROUND,	BLACK LETTERING)
TWELVE O'CLOCK –	FLAMMABILITY	(RED BACKGROUND,	BLACK LETTERING)
THREE O'CLOCK –	INSTABILITY	(YELLOW BACKGROUND,	BLACK LETTERING)
SIX O'CLOCK –	SPECIAL	(WHITE BACKGROUND,	BLACK LETTERING)

REFERENCES
NEPA 704
UFC 7901.9
IFC 2703.5

15"

12"

NOTES:

1. SIGN HEADER SHALL BE WHITE LETTERS ON RED BACKGROUND.
2. SIGNS MUST BE OF DURABLE MATERIAL WITH BLACK LETTERING ON A WHITE BACKGROUND.
3. SIGNS SHALL NOT BE OBSCURED OR REMOVED AND SHALL BE IN ENGLISH AS A PRIMARY LANGUAGE.
4. SIGNS TO BE PLACED ON GENERATOR/FUEL TANK PER NEPA 704
5. CONTRACTOR TO PROVIDE ALL REQUIRED SIGNAGE.

AT&T IDENTIFICATION SIGN: 8"x12"

DO NOT DISCONNECT

NOTES:

1. FINDING AC PLUG TO ENGINE HEATER
2. DISCONNECTED, KEEPING GENSET FROM STARTING
3. RESULTING IN A VENDOR/OEM CALL

COMPLIANCE SIGNS.COM (800) 578–1245 TAG–F0D402B0D001

Front *Back*

FUELING PROBLEMS

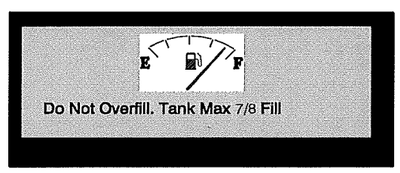

NOTES:

1. UPRINTING.COM (888) 888–4111
2. PLACEMENT NEAR GENSET FUEL FILL

AT&T ABOVE GROUND FUEL STORAGE SYSTEMS
SIGNS AND LABELING REQUIREMENTS
NOT TO SCALE

1

PRELIMINARY
NOT FOR
CONSTRUCTION

IT IS A VIOLATION OF LAW FOR ANY PERSON UNLESS THEY ARE ACTING UNDER THE DIRECTION OF A LICENSED PROFESSIONAL ENGINEER TO ALTER THIS DOCUMENT. UNLESS EXPLICITLY AGREED TO BY THE ENGINEER IN WRITING, THE ENGINEER DISCLAIMS ALL LIABILITY ASSOCIATED WITH THE REUSE, ALTERATION OR MODIFICATION OF THE CONTENTS HEREIN.

FDH VELOCITEL
ENGINEERING INNOVATION
6103 E. MOLLOY ROAD
EAST SYRACUSE, NY 13057
PHONE - (315)414-0510
FAX - (315)414-0509

PREPARED FOR:
at&t MOBILITY
5841 BRIDGE STREET
EAST SYRACUSE, NY 13057

SITE NO. MA1106
TRURO
FA# 10034571
344 US ROUTE #6
TRURO, MA 02666

NO	DATE	REVISIONS	BY	CK'D	APP'D
A	06/21/16	ISSUED FOR REVIEW	SEP	HJ	–

SCALE: DESIGNED: –

SIGNAGE

JOB #	DRAWING NUMBER	REV
207-A10034571G	C4	A

COMPONENTS LOCATED IN LOW VOLTAGE CUSTOMER CONNECTION BOX

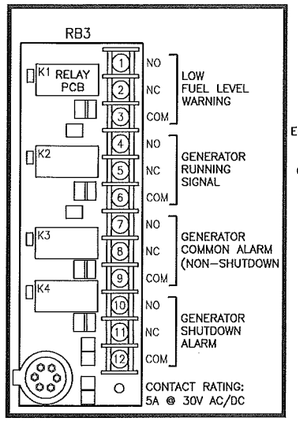

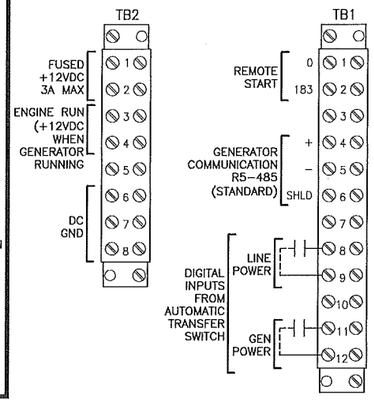

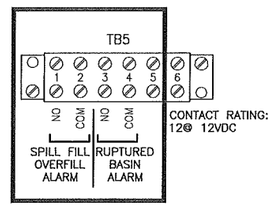

NOTE:
FOR FIELD WIRING TO CUSTOMER CONNECTIONS (TERMINAL STRIP)
MAXIMUM WIRE SIZE: #14 AWG
RECOMMENDED TIGHTENING TORGUE: 14 LB-IN

OEM Vendor Relay is Normally Energized

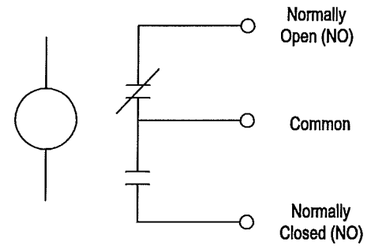

OEM Vendor Relay is Normally energized which simulates a Normally Closed circuit when using the Normally Open contact points on the OEM relay.

ALARM AND CONTROL WIRING CONNECTIONS DETAIL

NOT TO SCALE

1

Fixed Generator Auxillary 66 Block

66 Block Positions	66 Alarm Block Wiring		OSS Alarm Normal Contact Type (NO or NC)	OSS alarm Slogan/Label (Recommended MNRC Alarm Text)	OEM Vendor Alarm Definition	OEM Vendor Connections	Vendor Alarm Normal Contact Type (NO or NC)	ADDITIONAL NOTES/INFORMATION
Block #1&2	wht/blu	blu/wht	NO	RBS GENERATOR FAIL	GENERATOR SHUTDOWN ALARM	RB3 10 & 12	NO	OEM Vendor Relay is Normally engergized which simulates a Normally Closed circuit when using the Normally Open contact points on the OEM relay. This configuration supports both wire/connection and relay failures. Relay de-energized = alarm condition or failed relay. Open wire/broken connection = alarm condition, use the normally open (NO) OEM contact to support this configuration..
Block #1 3&4	wht/org	org/wht	NO	RBS GENERATOR MJ	GENERATOR COMMON ALARM (NON-SHUTDOWN)	RB3 7 & 9	NO	OEM Vendor Relay is Normally energized which simulates a Normally Closed circuit when using the Normally Open contact points on the OEM relay. This configuration supports both wire/connection and relay failures. Relay de-energized = alarm condition or failed relay. Open wire/broken connection = alarm condition, use the normally open (NO) OEM contact to support this configuration.
Block #1 5&6	wht/grn	grn/wht	NO	RBS GENERATOR RUNNING	GENERATOR RUNNING SIGNAL	RB3 4 & 6	NO	OEM Vendor Relay is Normally energized which simulates a Normally Closed circuit when using the Normally Open contact points on the OEM relay. This configuration supports both wire/connection and relay failures. Relay de-energized = alarm condition or failed relay. Open wire/broken connection = alarm condition, use the normally open (NO) OEM contact to support this configuration.
Block #1 7&8	wht/brn	brn/wht	NO	RBS GENERATOR FUEL LOW	LOW FUEL LEVEL WARNING	RB3 1 & 3	NO	OEM Vendor Relay is Normally energized which simulates a Normally Closed circuit when using the Normally Open contact points on the OEM relay. This configuration supports both wire/connection and relay failures. Relay de-energized = alarm condition or failed relay. Open wire/broken connection = alarm condition, use the normally open (NO) OEM contact to support this configuration.
Block #1 9&10	wht/blu	blu/wht	NO	RBS GENERATOR FUEL LEAK	RUPTURED BASIN ALARM	TB5 3 & 4	NO	OEM Vendor Relay is Normally energized which simulates a Normally Closed circuit when using the Normally Open contact points on the OEM relay. This configuration supports both wire/connection and relay failures. Relay de-energized = alarm condition or failed relay. Open wire/broken connection = alarm condition, use the normally open (NO) OEM contact to support this configuration.
Block #1 11&12	wht/blu	grn/wt	NO	RBS GENERATOR FUEL LEAK	SPILL FILL OVERFLOW ALARM	TB5 1 & 2	NO	OEM Vendor Relay is Normally energized which simulates a Normally Closed circuit when using the Normally Open contact points on the OEM relay. This configuration supports both wire/connection and relay failures. Relay de-energized = alarm condition or failed relay. Open wire/broken connection = alarm condition, use the normally open (NO) OEM contact to support this configuration.

NOTE: LTE SOURCE OF ALARMING

SITE GENERATOR CONTROL & ALARMS SHEDULE

NOT TO SCALE

2

PRELIMINARY NOT FOR CONSTRUCTION

IT IS A VIOLATION OF LAW FOR ANY PERSON UNLESS THEY ARE ACTING UNDER THE DIRECTION OF A LICENSED PROFESSIONAL ENGINEER TO ALTER THIS DOCUMENT. UNLESS EXPLICITLY AGREED TO BY THE ENGINEER IN WRITING, THE ENGINEER DISCLAIMS ALL LIABILITY ASSOCIATED WITH THE REUSE, ALTERATION OR MODIFICATION OF THE CONTENTS HEREIN.

FDH VELOCITEL
ENGINEERING INNOVATION
6103 E. MOLLOY ROAD
EAST SYRACUSE, NY 13057
PHONE - (315)414-0510
FAX - (315)414-0509

PREPARED FOR:
at&t MOBILITY
5841 BRIDGE STREET
EAST SYRACUSE, NY 13057

SITE NO. MA1106
TRURO
FA# 10034571
344 US ROUTE #6
TRURO, MA 02666

NO.	DATE	REVISIONS	BY	CK'D	APP'D
A	06/21/16	ISSUED FOR REVIEW	SEP	HJ	–

SCALE: | DESIGNED: –

ALARM AND CONTROL DETAILS

JOB #	DRAWING NUMBER	REV
207-A10034571G	C5	A

GENERAL NOTES

1. INSPECTIONS

   A. GENERAL: DURING AND UPON COMPLETION OF THE WORK, ARRANGE AND PAY ALL ASSOCIATED INSPECTIONS OF ALL ELECTRICAL WORK INSTALLED UNDER THIS CONTRACT IN ACCORDANCE WITH THE CONDITIONS OF THE CONTRACT. INSTALLATION SHALL COMPLY WITH APPLICABLE LAWS AND ORDINANCES, UTILITY COMPANY REQUIREMENTS, AND THE LATEST EDITION OF NEC, NFC, NEMA, OSHA, SBC, AND UL.

   B. INSPECTIONS REQUIRED: AS PER THE LAWS AND REGULATIONS OF THE LOCAL AND/OR STATE AGENCIES HAVING JURISDICTION AT THE PROJECT SITE.

   C. INSPECTION AGENCY: APPROVED BY THE LOCAL AND/OR STATE AGENCIES HAVING JURISDICTION AT THE PROJECT SITE.

   D. CERTIFICATES: SUBMIT ALL REQUIRED INSPECTION CERTIFICATES.

2. HANGERS AND SUPPORTS

   A. MATERIALS: ALL HANGERS, SUPPORTS, FASTENERS AND HARDWARE SHALL BE STAINLESS STEEL OR OF EQUIVALENT CORROSION RESISTANCE BY TREATMENT OR INHERENT PROPERTY, AND SHALL BE MANUFACTURED PRODUCTS DESIGNED FOR THE APPLICATION. PRODUCTS FOR OUTDOOR USE SHALL BE HOT DIP GALVANIZED.

   B. TYPES: HANGERS, STRAPS, RISER SUPPORTS, CLAMPS, U-CHANNEL, THREADED RODS, ETC. AS INDICATED OR REQUIRED.

   C. INSTALLATION: RIGIDLY SUPPORT AND SECURE ALL MATERIALS, RACEWAY AND EQUIPMENT TO BUILDING STRUCTURE USING HANGERS, SUPPORTS AND FASTENERS SUITABLE FOR THE USE. MATERIALS AND LOADS ENCOUNTERED. PROVIDE ALL NECESSARY HARDWARE. PROVIDE CONDUIT SUPPORTS AT MAXIMUM 5 FT. O.C.

   D: STRUCTURAL MEMBERS: DO NOT CUT, DRILL, OR WELD ANY STRUCTURAL MEMBER EXCEPT AS SPECIFICALLY APPROVED BY THE ENGINEER.

   E. MISCELLANEOUS SUPPORTS: PROVIDE ANY ADDITIONAL STRUCTURAL SUPPORT STEEL BRACKETS, ANGLES, FASTENERS AND HARDWARE AS REQUIRED TO ADEQUATELY SUPPORT ALL ELECTRICAL MATERIALS AND EQUIPMENT.

   F. ONE HOLE STRAPS SHALL NOT BE USED FOR CONDUITS LARGER THAN 3/4 INCH.

3. ENCLOSURES

   A. NEMA 3R

4. HOLES, SLEEVES AND OPENINGS

   GENERAL: PROVIDE ALL HOLES, SLEEVES, AND OPENINGS REQUIRED FOR THE COMPLETION OF WORK AND RESTORE ALL SURFACES DAMAGED TO MATCH SURROUNDING SURFACES.

5. CUTTING AND PATCHING

   A. GENERAL: PROVIDE ALL CUTTING, DRILLING, FITTING AND PATCHING NECESSARY FOR ACCOMPLISHING THE WORK. THIS INCLUDES ANY AND ALL WORK NECESSARY TO: UNCOVER WORK TO PROVIDE FOR THE INSTALLATION OF ILL TIMED WORK, REMOVE AND REPLACE DEFECTIVE WORK AND WORK NOT CONFORMING TO THE REQUIREMENTS OF THE CONTRACT DOCUMENTS.

   B. REPAIRS: REPAIR ANY AND ALL DAMAGE TO WORK OF OTHER TRADES CAUSED BY CUTTING AND PATCHING OPERATIONS, USING SKILLED MECHANICS OF THE TRADES INVOLVED.

6. RACEWAY SYSTEMS

   A. ALL ABOVE GRADE CONDUIT AND ALL CONDUIT ELBOWS SHALL BE RIGID GALVANIZED STEEL UNLESS NOTED OTHERWISE.

7. CONDUCTORS

   USE 98% CONDUCTIVITY COPPER WITH TYPE XHHW-2 INSULATION, 600 VOLT, COLOR CODED. USE SOLID CONDUCTORS FOR WIRE UP TO AND INCLUDING NO. 8 AWG, STRANDED CONDUCTORS FOR WIRE LARGER THAN NO. 8. USE PRESSURE-TYPE INSULATED TWIST-ON CONNECTORS FOR NO. 10 AWG AND SMALLER, SOLDERLESS MECHANICAL TERMINAL LUGS FOR NO. 8 AWG AND LARGER.

8. GROUNDING SYSTEM

   A. INSTALLATION: INSTALL AS REQUIRED PER SPECIFICATION. CONTRACTOR REPRESENTATIVE WILL INSPECT EXOTHERMIC WELDS AND CONDUCT MEGGER TEST PRIOR TO BURIAL. MAXIMUM 5 OHMS RESISTANCE IS REQUIRED, WHEN MORE THAT (4) ADDITIONAL GROUNDS ARE REQUIRED, VERIFY OHM LEVEL PRIOR TO CONSTRUCTION. USE CLEAN SAND AND CLAYBACKFILL FOR BURIED GROUND CONDUCTORS.

9. CHECKOUT, TESTING AND ADJUSTING

   A. CORRECTION/REPLACEMENT: AFTER TESTING BY CONTRACTOR, OWNER OR ENGINEER, CORRECT ANY DEFICIENCIES AND REPLACE MATERIALS AND EQUIPMENT SHOWN TO BE DEFECTIVE OR UNABLE TO PERFORM AT DESIGN OR RATED CAPACITY.

   B. POWER CONDUCTORS: CONTRACTOR SHALL CONDUCT A CONTINUITY & INSULATION TEST ON CONDUCTORS BETWEEN SERVICE DISCONNECT SWITCH & POWER CABINET.

   C. WHEN SITE POWER IS DERIVED FROM 3 PHASE SOURCE, LOAD READINGS WILL BE TAKEN AND RECORDED TO MAINTAIN A BALANCED LOAD AT THE PRIMARY SOURCE. RECORDS SHALL BE TURNED IN TO THE OWNER'S REPRESENTATIVE.

10. CONTRACTOR SHALL INSPECT GENERATOR AND AUTOMATIC TRANSFER SWITCH UPON RECEIVING AND NOTE/REPORT ANY DAMAGES TO VELOCITEL CONSTRUCTION MANAGER.

PRELIMINARY NOT FOR CONSTRUCTION

IT IS A VIOLATION OF LAW FOR ANY PERSON UNLESS THEY ARE ACTING UNDER THE DIRECTION OF A LICENSED PROFESSIONAL ENGINEER TO ALTER THIS DOCUMENT. UNLESS EXPLICITLY AGREED TO BY THE ENGINEER IN WRITING, THE ENGINEER DISCLAIMS ALL LIABILITY ASSOCIATED WITH THE REUSE, ALTERATION OR MODIFICATION OF THE CONTENTS HEREIN.

FDH VELOCITEL
ENGINEERING INNOVATION
6103 E. MOLLOY ROAD
EAST SYRACUSE, NY 13057
PHONE - (315)414-0510
FAX - (315)414-0509

PREPARED FOR:
at&t MOBILITY
5841 BRIDGE STREET
EAST SYRACUSE, NY 13057

SITE NO. MA1106
TRURO
FA# 10034571
344 US ROUTE #6
TRURO, MA 02666

NO	DATE	REVISIONS	BY	CK'D	APP'D
A	06/21/16	ISSUED FOR REVIEW	SEP	HJ	--

SCALE: | DESIGNED: --

GROUNDING AND ELECTRICAL NOTES

JOB #	DRAWING NUMBER	REV
207-A10034571G	E1	A

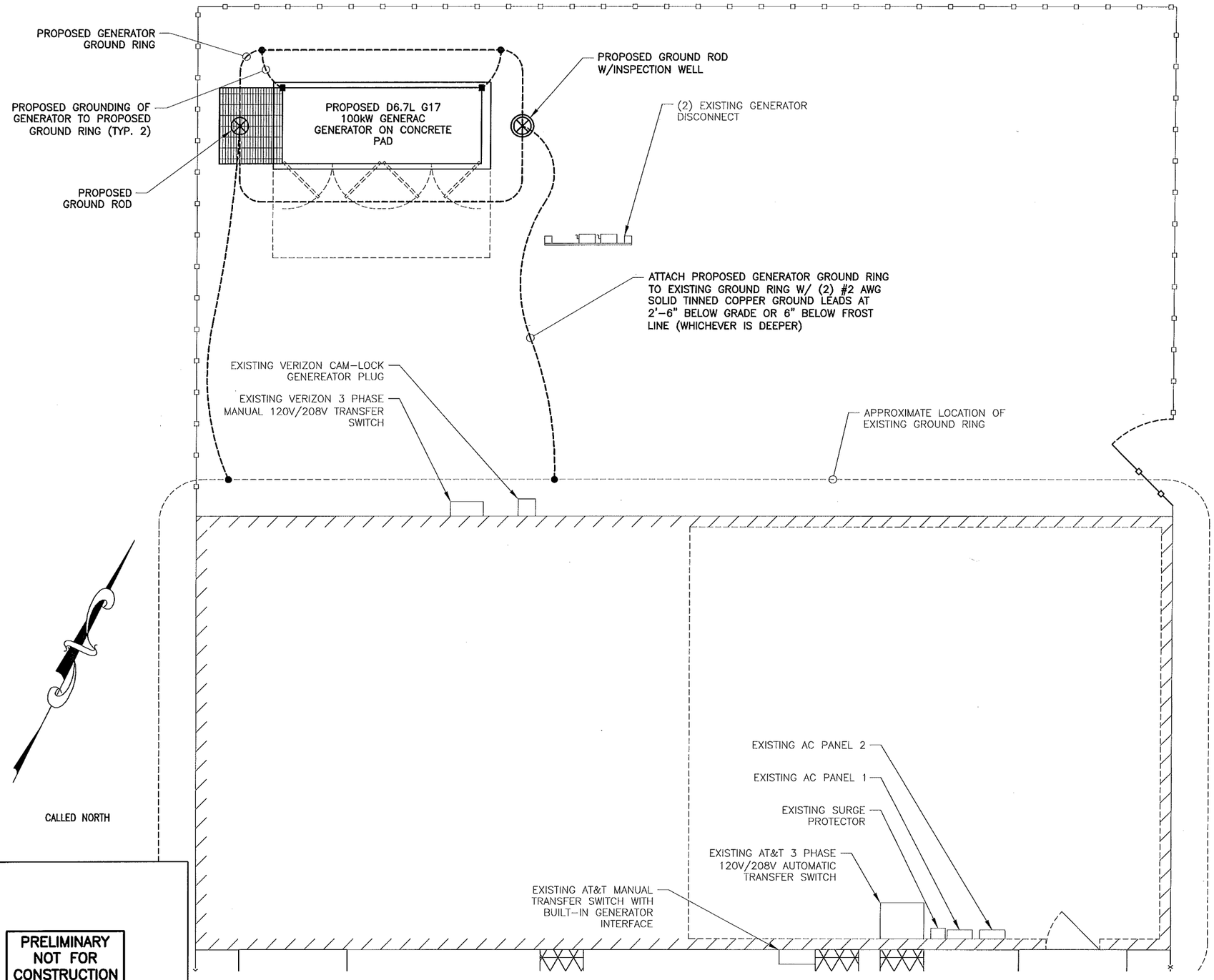

CALLED NORTH

GROUNDING SYMBOLS

- GROUND ROD WITH ACCESS
- CHEMICAL GROUND ROD
- GROUND ROD
- DISCONNECT SWITCH
- METER
- CIRCUIT BREAKER
- CADWELD TYPE CONNECTION
- COMPRESSION TYPE CONNECTION
- GROUNDING WIRE

NOTES:

1. NO NEW POWER CONDUITS OR ASSOCIATED CONDUCTORS SHALL BE INSTALLED FOR THIS PROJECT.
2. CONTRACTOR SHALL EXERCISE CAUTION DURING REMOVAL OF EXISTING GENERATOR AND PAD SO THAT EXISTING CONDUITS AND CONDUCTORS ARE MAINTAINED IN GOOD CONDITION AND REUSABLE.
3. CONTRACTOR SHALL REROUTE EXISTING CONDUITS AND CONDUCTORS TO NEW GENERATOR LOCATION PRIOR TO INSTALLATION OF GENERATOR PAD.
4. CONTRACTOR SHALL RECONNECT EXISTING CONDUCTORS AND CONTROL WIRING TO NEW GENERATOR ONCE SET IN PLACE.

GROUNDING AND ELECTRICAL LAYOUT PLAN

SCALE: 1"=5'

1

1"=5' 5 0 5

PRELIMINARY NOT FOR CONSTRUCTION

IT IS A VIOLATION OF LAW FOR ANY PERSON UNLESS THEY ARE ACTING UNDER THE DIRECTION OF A LICENSED PROFESSIONAL ENGINEER TO ALTER THIS DOCUMENT, UNLESS EXPLICITLY AGREED TO BY THE ENGINEER IN WRITING, THE ENGINEER DISCLAIMS ALL LIABILITY ASSOCIATED WITH THE REUSE, ALTERATION OR MODIFICATION OF THE CONTENTS HEREIN.

FDH VELOCITEL
ENGINEERING INNOVATION
6103 E. MOLLOY ROAD
EAST SYRACUSE, NY 13057
PHONE - (315)414-0510
FAX - (315)414-0509

PREPARED FOR:

at&t MOBILITY
5841 BRIDGE STREET
EAST SYRACUSE, NY 13057

SITE NO. MA1106
TRURO
FA# 10034571
344 US ROUTE #6
TRURO, MA 02666

NO	DATE	REVISIONS	BY	CK'D	APP'D
A	06/21/16	ISSUED FOR REVIEW	SEP	HJ	–

SCALE: | DESIGNED: –

GROUNDING AND ELECTRICAL PLAN

JOB #	DRAWING NUMBER	REV
207-A10034571G	E2	A

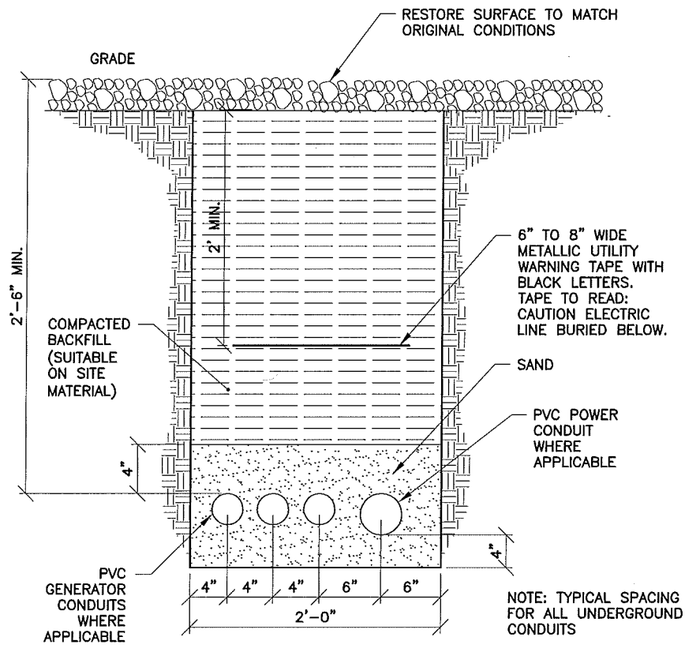

UTILITY TRENCH DETAIL

NOT TO SCALE

1

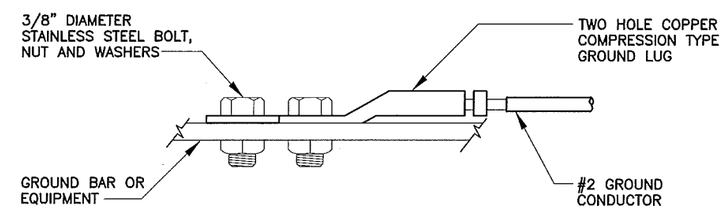

EQUIPMENT GROUND CONNECTION

NOT TO SCALE

2

NOTES:
1. ALL MECHANICAL EXTERNAL TERMINATION SURFACES SHALL BE TREATED WITH T&B KOPR-SHIELD CP8 ANTI-OXIDATION COMPOUND.

2. INSTALL 2-HOLE LUG WITH INSPECTION WINDOW AS REQUIRED

UTILITY TRENCH NOTES:

1. PROVIDE SCHEDULE 40 PVC CONDUIT BELOW GRADE EXCEPT AS NOTED BELOW.
2. PROVIDE RGS CONDUIT ABOVE GRADE.
3. PROVIDE RGS CONDUIT AND ELBOWS AT STUB UP LOCATIONS (i.e. SERVICE POLE, EQUIPMENT, ETC.).
4. PROVIDE SCHEDULE 80 PVC CONDUIT FOR INSTALLATIONS BELOW PARKING LOTS AND ROADWAYS.
5. INSTALL UTILITY PULLBOXES PER NEC.

* SEPARATION DIMENSION TO BE VERIFIED WITH LOCAL UTILITY CO. REQUIREMENTS

PRELIMINARY NOT FOR CONSTRUCTION

IT IS A VIOLATION OF LAW FOR ANY PERSON UNLESS THEY ARE ACTING UNDER THE DIRECTION OF A LICENSED PROFESSIONAL ENGINEER TO ALTER THIS DOCUMENT. UNLESS EXPLICITLY AGREED TO BY THE ENGINEER IN WRITING, THE ENGINEER DISCLAIMS ALL LIABILITY ASSOCIATED WITH THE REUSE, ALTERATION OR MODIFICATION OF THE CONTENTS HEREIN.

FDH VELOCITEL
ENGINEERING INNOVATION
6103 E. MOLLOY ROAD
EAST SYRACUSE, NY 13057
PHONE - (315)414-0510
FAX - (315)414-0509

PREPARED FOR:

at&t MOBILITY
5841 BRIDGE STREET
EAST SYRACUSE, NY 13057

SITE NO. MA1106
TRURO
FA# 10034571
344 US ROUTE #6
TRURO, MA 02666

NO	DATE	REVISIONS	BY	CK'D	APP'D
A	06/21/16	ISSUED FOR REVIEW	SEP	HJ	–

SCALE: DESIGNED: –

GROUNDING AND ELECTRICAL DETAILS

JOB #	DRAWING NUMBER	REV
207-A10034571G	E3	A

CONTRACTOR TO VERIFY FINAL LOCATION OF CONDUIT STUB-UPS WITH GENERATOR MANUFACTURER AND PER SPECIFICATIONS PRIOR TO INSTALLATION

NOTES:

1. SLAB TOLERANCE IS ±1/4".
2. ADDITIONAL ENGINEERING REVIEW IS REQUIRED IF THE PAD IS PLACED ON SOIL WITH A BEARING CAPACITY LESS THAN 2000 PSF.
3. REBAR – SEE SPECIFICATIONS
4. OVERLAP SPLICES ARE ALLOWED FOR REINFORCING BAR, USE 18" MINIMUM LAP.
5. CONCRETE COMPRESSION STRENGTH (f'c) TO BE 3000 P.S.I. MINIMUM.
6. ATTACH GENERATOR BASE TO CONCRETE PAD W/ MINIMUM (4) 1/2" DIA. HILTI KWIK BOLT TZ ANCHORS, OR APPROVED EQUAL, W/ 2" EFFECTIVE EMBED. DEPTH.

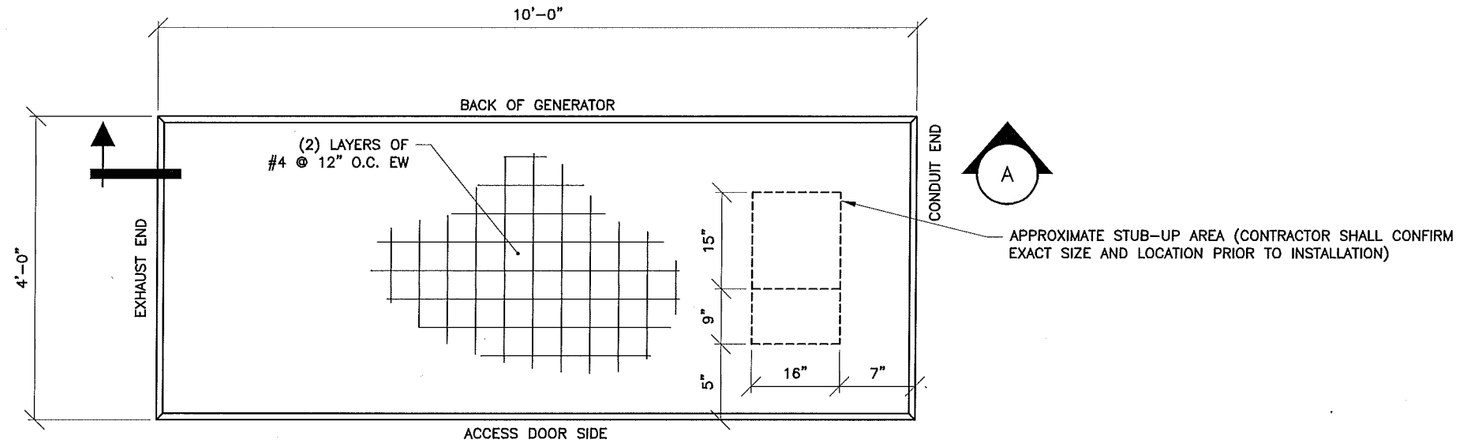

GENERATOR FOUNDATION PLAN

NOT TO SCALE

1

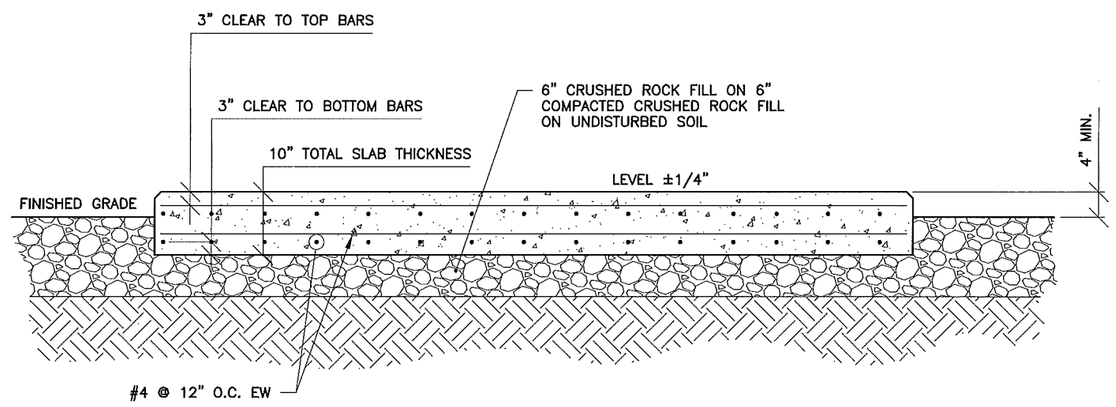

SECTION A-A

NOT TO SCALE

PRELIMINARY NOT FOR CONSTRUCTION

IT IS A VIOLATION OF LAW FOR ANY PERSON UNLESS THEY ARE ACTING UNDER THE DIRECTION OF A LICENSED PROFESSIONAL ENGINEER TO ALTER THIS DOCUMENT. UNLESS EXPLICITLY AGREED TO BY THE ENGINEER IN WRITING, THE ENGINEER DISCLAIMS ALL LIABILITY ASSOCIATED WITH THE REUSE, ALTERATION OR MODIFICATION OF THE CONTENTS HEREIN.

FDH VELOCITEL
ENGINEERING INNOVATION
6103 E. MOLLOY ROAD
EAST SYRACUSE, NY 13057
PHONE - (315)414-0510
FAX - (315)414-0509

PREPARED FOR:

at&t MOBILITY
5841 BRIDGE STREET
EAST SYRACUSE, NY 13057

SITE NO. MA1106
TRURO
FA# 10034571

344 US ROUTE #6
TRURO, MA 02666

NO	DATE	REVISIONS	BY	CK'D	APP'D
A	06/21/16	ISSUED FOR REVIEW	SEP	HJ	–

SCALE: DESIGNED: –

FOUNDATION PLAN AND SECTIONS

JOB #	DRAWING NUMBER	REV
207-A10034571G	S1	A

Consent Agenda Item: 6A3

TOWN OF TRURO

Board of Selectmen Agenda Item

DEPARTMENT: Administration

REQUESTOR: Rae Ann Palmer, Town Manager

REQUESTED MEETING DATE: September 13, 2016

ITEM: Approval of Employment Contract with the Police Lieutenant

EXPLANATION: I have completed negotiations with the Lieutenant. His contract is above the dollar amount I am authorized by Charter to sign, therefore, I am submitting it to the Board for authorization and signature.

FINANCIAL SOURCE (IF APPLICABLE): Fiscal Year 2017 Budget

SUGGESTED ACTION: *Motion to authorize the Chair of the Board of Selectmen to sign an employment contract with the Police Lieutenant.*

ATTACHMENTS:

1. Proposed Contract

Lieutenant of Police
Truro Police Department

Employment Agreement
Between

The Town Of Truro
And
Craig Danziger

Effective
July 1, 2016 - June 30, 2017

TABLE OF CONTENTS PAGE

Table of Contents	2
Duties	3
Hours of Work	3
Indemnification	3
Insurances	3
Injured on Duty	3
Death during Term of Employment	4
Termination and Severance Pay	4
Compensation	4
No reduction of Benefits	4
Modification	4
Law Governing	5
Severability of Provisions	5
Length of Contract	5
Automobile	5
Grievance Procedure	5
Job Security	5
Signature Page	

Agreement made this ____day of _____ by and between the TOWN of Truro (hereinafter the "TOWN") and Craig Danziger of Truro, Massachusetts (hereinafter the "LIEUTENANT"). This agreement is retroactive to July 1, 2016.

WHEREAS, the TOWN is desirous of securing the continued services of the LIEUTENANT, who is the Second in Command within the Truro Police Department's structure and operations, and

WHEREAS, the LIEUTENANT is willing to continue to perform the duties of the position of LIEUTENANT according to the terms and conditions of this Contract;

NOW, THEREFORE, the TOWN and the LIEUTENANT hereby agree that the following terms and conditions shall govern the salary and fringe benefits payable under this contract to which said LIEUTENANT shall be entitled as LIEUTENANT.

1. DUTIES

The duties of the LIEUTENANT shall be those as outlined in the Job Description for the position of Lieutenant as set forth in Rule 15.2, in the Rules and Regulations governing the Truro Police Department and those assigned by the Chief of Police.

2. HOURS OF WORK

A. The LIEUTENANT shall work an average of Forty (40) hours per week as scheduled by the Chief of Police.

B. It is recognized that the LIEUTENANT must devote time outside the normal office hours to the business of the LIEUTENANT, and to that end, the LIEUTENANT shall, with prior written notice to the Chief of Police, be allowed to take reasonable time off as he shall deem appropriate during normal office hours at such time as the Chief reasonably determines will not adversely impact department operations.

C. The parties acknowledge that this position qualifies as exempt under the Fair Labor Standards Act and shall be treated as such.

3. INDEMNIFICATION

The TOWN agrees that the TOWN shall defend, save harmless and indemnify the LIEUTENANT against any tort, professional liability claim or demand or other civil or criminal legal action, whether groundless or otherwise, arising out of an alleged act or omission occurring in the performance of the LIEUTENANT'S duties as Police LIEUTENANT of the TOWN. The TOWN's indemnification obligations herein shall not extend to any violation of a person's state or federal civil rights if the LIEUTENANT is adjudged to have acted in a grossly negligent, willful, or malicious manner, nor shall the indemnification obligations extend to any disciplinary actions or other proceedings by the TOWN against the LIEUTENANT.

4. INSURANCE

A. Professional Liability
The TOWN agrees to furnish at its expense Law Enforcement Liability Insurance with liability limits established in consultation with the TOWN'S Insurance Consultant (MIAA).

B. Health Insurance
The LIEUTENANT shall be eligible for all health and life insurance benefits for which other police department employees are eligible. The TOWN agrees to contribute towards the cost of such insurance programs an amount or percentage not less than the highest applicable amount or percentage available to any officer of the Police Department.

C. Life Insurance
The Town agrees to provide and pay the total premium for life insurance of One Hundred Fifty-thousand Dollars and no cents *($150,000.00).*

5. INJURED ON DUTY
As a sworn police officer, the LIEUTENANT shall be entitled to injured-on-duty benefits as provided in Chapter 4 1, Section 111 F of the Massachusetts General Laws.

6. DEATH DURING TERM OF EMPLOYMENT
If the Lieutenant dies during the term of his employment, the TOWN shall pay to the LIEUTENANT'S estate all the compensation which would otherwise be payable to the LIEUTENANT up to the date of the LIEUTENANT'S death.

7. TERMINATION AND SERVERANCE PAY
A. Nothing in this Agreement shall prevent, limit, or otherwise interfere with the right of the Town to terminate the services of the Lieutenant, for just cause, at anytime by the Board of Selectmen, acting for the Town, at a regularly posted meeting, subject to Section 15, below.

B. Nothing in this Agreement shall prevent, limit, or otherwise interfere with the right of the Lieutenant to resign at any time from his position with the Town. In the event that the Lieutenant intends to resign voluntarily before the expiration of any term of employment, then the Lieutenant shall give the Town a minimum of thirty (30) days written advance notice, unless the parties otherwise agree in writing. Upon such notice, the Lieutenant will be entitled to receive pay for any unused vacation leave and twenty-five percent (25%) of up to one hundred (100) sick days accrued.

8. COMPENSATION
The Town agrees to pay the LIEUTENANT for his services rendered pursuant here to an annual salary of $105,000.00, payable in installments according to the Town's usual payroll schedule.

The LIEUTENANT shall receive at least the same number of sick days, vacation, personal days, bereavement days, military leave, uniform and cleaning allowance, and all other benefits, except educational incentive pay, as any regular police officer of any rank of the Truro Police Department, except the position of Chief of Police. For the purpose of longevity, the Town of Truro recognizes the Lieutenant's total years of service for the purpose of longevity compensation as 19 years, as of June 2015.

The LIEUTENANT shall not work details unless authorized by the Chief of Police and then only after said details are refused by all full-time members of the Truro Police Employees Federation.

9. NO REDUCTION OF BENEFITS

The TOWN agrees that the TOWN shall not at any time during this contract reduce the salary, compensation or other benefits of the LIEUTENANT, except to the extent that such reduction is evenly applied across-the-board for all employees of the TOWN. However, all cost items in this agreement are subject to appropriation.

10. MODIFICATION

No change or modification of this Contract shall be valid unless it shall be in writing and signed by both of the parties.

11. LAW GOVERNING

This contract shall be construed and governed by the Laws of the Commonwealth of Massachusetts.

12. SEVERABILITY OF PROVISIONS

If any clause or provision of this contract shall be determined to be illegal by a court of competent jurisdiction, the remainder of this contract shall not be affected thereby.

13. LENGTH OF CONTRACT

The term of this contract shall be for a one year period commencing July 1, 2016 and ending June 30, 2017.

14. AUTOMOBILE

The Town shall provide a police vehicle for use by the LIEUTENANT, and pay for all attendant operation and maintenance expenses and insurance. The LIEUTENANT shall have use (but not exclusive, as the vehicle is available to the department as needed) in connection with, but not limited to, the performance of his duties as LIEUTENANT, professional growth and development, and to commute with the permission of the Chief of Police. It is expected that the LIEUTENANT will respond to the needs and emergencies of the community when necessary or required.

15. GRIEVANCE PROCEDURE

The LIEUTENANT may seek arbitration of a discharge through The Labor Relations Connection, LLC. In such an event, the parties agree that an arbitrator shall be appointed using the two-list administrative appointment procedure of The Labor Relations Connection, LLC. The administrative and arbitrator's fees for such arbitration shall be divided and borne equally between the parties. It is agreed that arbitration in accordance with this provision of this Agreement shall be the LIEUTENANT's sole and exclusive remedy for contesting a discharge. The LIEUTENANT shall have no recourse beyond the Board of Selectmen to contest any discipline short of discharge.

16. JOB SECURITY

During the term of this agreement, the position of LIEUTENANT shall not be eliminated.

IN WITNESS WHEREOF, the Town of Truro has caused this Agreement to be signed and executed on its behalf by its Chairman of the Board of Selectmen, and duly attested by its Town Clerk, and the LIEUTENANT has signed and executed this Agreement, both in duplicate, the day and year first above written.

_____	_____
Craig L. Danziger	Rae Ann Palmer, Town Manager
_____	_____
Attest:	Paul C. Wisotzky (Chair)
Cynthia Slade, Town Clerk	

TOWN OF TRURO

Board of Selectmen Agenda Item

DEPARTMENT: Administration

REQUESTOR: Noelle Scoullar, Executive Assistant, on behalf of Joan McDonald, Office and Training Coordinator, Cape & Islands Suicide Prevention Coalition

REQUESTED MEETING DATE: September 13, 2016

ITEM: Proclamation acknowledging September 5-11 as Suicide Prevention Week

EXPLANATION: In recognition of National Suicide Prevention Month, the Cape & Islands Suicide Prevention Coalition is seeking to have the week of September 5-11 named "Suicide Prevention Week" in all of the Cape and Islands towns.

FINANCIAL SOURCE (IF APPLICABLE): N/A

IMPACT IF NOT APPROVED: N/A

SUGGESTED ACTION: *MOTION TO acknowledge September 5-11 as Suicide Prevention Week and sign the proclamation.*

ATTACHMENTS:

1. Letter from Joan McDonald

Consent Agenda Item: 6B1

Cape & Islands Suicide Prevention Coalition

Cape & Islands Suicide Prevention Coalition
P.O. Box 119
Barnstable, MA 02630

August 2, 2016

RECEIVED
SELECTMENS OFFICE
AUG 08 2016
TOWN OF TRURO
MASSACHUSETTS

Board of Selectmen
Town of Truro
PO Box 2012
Truro, MA 02666

Dear Board of Selectmen:

Each year, we lose more than 30 Cape & Island residents to suicide. And for each of these suicide deaths, it is estimated that at least 6 additional people are profoundly affected by that loss—and more than 40 people affected by the loss. Suicide is a public health issue in our communities; and it is preventable.

In recognition of National Suicide Prevention Month, the Cape & Islands Suicide Prevention Coalition is once again seeking to have the week of September 5-11th named "Suicide Prevention Week" in all of the Cape and Islands towns.

We aim to recognize this painful and often hidden part our communities, to demonstrate our commitment to suicide prevention, and to send a message of hope to those struggling, grieving, or affected in any way by suicide. We know that by decreasing the stigma that surrounds suicide, we increase the likelihood that someone will reach out for help.

Please accept this proclamation request for the selectman's agenda for an early September or late August meeting (Sample proclamation wording is attached) I appreciate your consideration of this request, and look forward to hearing from you.

The proclamation can be emailed to me at suicideprevention@capecoalition.com or mailed to me at: Cape and Islands Suicide Prevention Coalition, P.O. Box 119, Barnstable, MA 02630

Warm Regards,

Joan McDonald
Office and Training Coordinator
Cape & Islands Suicide Prevention Coalition

Consent Agenda Item: 6C

TOWN OF TRURO

Board of Selectmen Agenda Item

DEPARTMENT: Administration

REQUESTOR: Nicole Tudor, Executive Assistant on behalf of Board of Selectmen

REQUESTED MEETING DATE: September 13, 2016

ITEM: Reappointments of Board/Committee/Commission Members

EXPLANATION: The following individual wishes to be reappointed to the Board or Committee on which they currently serve. The additional appointment of Angela Gaimari will assist in keeping this Committee moving forward with meetings regarding any issues or concerns with Cable and Internet in the town of Truro.

- Mary Abt to the Cable and Internet Advisory Committee for the term of 09/13/2016-6/30/2019.

The attached check list provides information regarding each individual's compliance with appointment requirements

IMPACT IF NOT APPROVED: The applicant will not be able to participate on their respective Committee or Board.

SUGGESTED ACTION: *MOTION TO appoint the applicant as noted above to serve on their respective board/committee.*

ATTACHMENTS

1. Reappointment checklist

Consent Agenda Item: 6C1

TOWN OF TRURO

P.O. Box 2030, Truro, MA 02666
Office of the Board of Selectmen
Tel: 508-349-7004, Extension: 10 or 24 Fax: 508-349-5505

Committees/Commissions/Board Members Seeking Reappointment

Committee/Commission/Board Name: Cable and Internet Advisory Committee
Committee/Commission/Board Member Name: Mary Abt, Chair and only member
Length of term: **3 Year Term**
Chair's endorsement of reappointment [n/a]
Standards of Professional Conduct signed [X]
On-Line Ethics Training Completed *Certificates good for 2 years* [X]
Signed Acknowledgment/Summary of Conflict of Interest Law [X]

TOWN OF TRURO

Board of Selectmen Agenda Item

DEPARTMENT: Department of Public Works

REQUESTOR: Interim Director Jarrod J. Cabral

REQUESTED MEETING DATE: September 13, 2016

ITEM: Declaration of Surplus items – Department of Public Works Vehicles

EXPLANATION: Vehicles beyond economical repair.

FINANCIAL SOURCE (IF APPLICABLE): N/A

IMPACT IF NOT APPROVED: Vehicles will degrade in place

SUGGESTED ACTION: MOTION TO *Approve Surplus Items from the Department of Public Works: 1967 Kaiser Dump Truck, 1975 AM General Dump Truck, 1994 International Dump Truck, 1997 Ford F-350 Pick-up, 1998 Ford Ambulance Van F-350, 2001 F-250, Petibone forklift, Yale Loader.*

ATTACHMENTS:

1. Jarrod Cabral, Interim DPW Director, August 29, 2016 Memo to Town Manager

Truro Department of Public Works

Memo

To: Town Manager Rae Ann Palmer

From: Jarrod J. Cabral, Interim DPW Director

Date: August 29, 2016

Re: Surplus equipment

The following is a list of surplus vehicles that are beyond economical repair.

1.	1967 Kaiser dump truck	17,600 Miles
2.	1975 AM General dump truck	8,057 Miles
3.	1994 International dump truck	70,575 Miles
4.	1997 Ford F-350 Pick-up	77,351 Miles
5.	1998 Ford Ambulance van F-350	73,703 Miles
6.	2001 F-250	131,665 Miles
7.	Petibone forklift	1,899 Hours
8.	Yale Loader	2,345 Hours

Jarrod J. Cabral

TOWN OF TRURO

Board of Selectmen Agenda Item

DEPARTMENT: Truro Police Department

REQUESTOR: Chief Kyle Takakjian

REQUESTED MEETING DATE: September 13, 2016

ITEM: Excess Property – Police Cruiser for Trade in

EXPLANATION: Request to approve the trade in of a 2010 Ford Crown Victoria, VIN # 2FABP7BV3AX143958. The current mileage 167,221 with a $500.00 trade value.

FINANCIAL SOURCE (IF APPLICABLE): Trade in value

IMPACT IF NOT APPROVED: Higher cost of new cruiser

SUGGESTED ACTION: *MOTION TO approve the designation of the 2010 Crown Victoria Cruiser as excess property and to authorize the trade-in of the vehicle toward the purchase of new cruisers.*

ATTACHMENTS: N/A

Consent Agenda Item: 6F

TOWN OF TRURO

Board of Selectmen Agenda Item

DEPARTMENT: Administration

REQUESTOR: Rae Ann Palmer, Town Manager

REQUESTED MEETING DATE: September 13, 2016

ITEM: Permission for Declaration of Surplus Items

EXPLANATION: As is easily visible, there are many rusted, unused pieces of equipment behind the Public Works Buildings and the Public Safety Facility. Less visible are pieces of equipment at the Transfer Station and inside the buildings. Much of the equipment was acquired from other government agencies. Interim Public Works Director Jarrod Cabral is cataloguing the equipment and preparing to dispose of it, per the previous request for a portion of the equipment. To facilitate the process, I am requesting authorization to dispose of all equipment that is either not usable or that we are not able to economically bring to usable condition. We will be certain to use whatever method of disposal is in the best interests of the Town. I should note that some equipment must be returned to the government agency that provided it.

FINANCIAL SOURCE (IF APPLICABLE): N/A

IMPACT IF NOT APPROVED: The surplus equipment will remain in place.

SUGGESTED ACTION: *MOTION TO authorize the Town Manager to dispose of surplus equipment that is not in usable condition or that cannot be restored to a usable state in the method that is most beneficial to the Town.*

ATTACHMENTS: None

TOWN OF TRURO

Board of Selectmen Agenda Item

DEPARTMENT: Licensing Department

REQUESTOR: Nicole Tudor, Executive Assistant

REQUESTED MEETING DATE: September 13, 2016

ITEM: Approval of a One Day Entertainment License for Captain's Choice Restaurant, 4 Highland Road, North Truro for Saturday, September 17th, 2016.

EXPLANATION: MGL Chapter 140 § 181 provides local authority to license performance events. Captain's Choice Restaurant would like to participate in the festivities of Truro Treasures weekend. The Manager, Kristi Wageman, has completed an entertainment application for this proposed entertainment on Saturday, September 17th. Times are yet to be determined based on which band is booked to play at the restaurant. The Entertainment application has been reviewed by the Chief of Police.

FINANCIAL SOURCE (IF APPLICABLE): N/A

IMPACT IF NOT APPROVED: Captain's Choice will not have a band play during Truro Treasures Weekend.

SUGGESTED ACTION*: MOTION TO approve a One Day Entertainment License for Kristi Wageman of Captain's Choice for Saturday, September 17th, 2016 for the afternoon hours of either 2:00pm-4:00pm or 3:00pm-5:00pm at 4 Highland Rd in Truro and to authorize the Chair to sign the application.*

ATTACHMENTS:

1. One Day Entertainment Application approved by Chief of Police

TOWN OF TRURO

Licensing Department
PO Box 2030, Truro, MA 02666
PH: 508-349-7004, Ext. 10 or 24 Fax: 508-349-5505
Email: ntudor@truro-ma.gov or nscoullar@truro-ma.gov

RECEIVED
SELECTMENS OFFICE
SEP 0 6 2016
TOWN OF TRURO
MASSACHUSETTS

Application for an Entertainment License

☐ Weekday ☒ Saturday ☐ Sunday *Please complete the Commonwealth's Public Entertainment on Sunday Application

PAID
Cash $25 -
9/6/16 NS

The undersigned hereby applies for a license in accordance with the provisions of Mass. General Laws, c.140 §183A amended, Ch. 140§181 & Ch.136§4

BUSINESS/ORGANIZATION INFORMATION

Kristi Wageman — Name of Applicant
Captain's Choice — Business/Organization Name

18 Old Colony Way Orleans, MA 02653
Mailing Address of Business/Organization

Is this a Non-profit or For-profit Entity (Check the appropriate box) ☐ Yes ☒ No
If yes, proof of Non-profit status **must** accompany this application

Kristi Wageman — Contact Person
[redacted] — Phone Number
Kristi@captainschoicetruro.com — Email

INDIVIDUAL APPLICANT INFORMATION

Individual's Name
Mailing Address

Phone Number
Email Address

EVENT INFORMATION

Sat Sept 17th — Day (s)/Date (s) of Event for License to be issued
Truro Treasures — Purpose of Event (example: fundraiser)

Hours of Event (*from - to*) 2-4 or 3-5 (depending on band)

Captain's Choice 4 Highland Rd. North Truro — Location (**Must** provide facility name, if any, street number and name)
Event is: ☐ Indoor ☒ Outdoor Event (Please check applicable box)

King White Realty 4 Highland Rd. 508.487.5800
Property Owner Name and Address — Phone number

Seating Capacity: 40
Occupancy Number: 84?

Approximate number of people attending

Name of Caterer (*if applicable*)

If the event is catered please return Caterer Food Service Form to Health Agent at Fax # 508.349.5508

Will an admission fee be collected? ☐ Yes ☒ No

Will there be a One Day Alcohol License ☐ Yes ☒ No **If yes; you must also apply for a One Day Alcohol License**

Will there be Police Traffic Control? ☐ Yes ☒ No

ENTERTAINMENT INFORMATION

Type of Entertainment: Please check the appropriate boxes.

Dancing: ☐ By Patron ☐ By Entertainers ☐ No Dancing

Music: ☐ Recorded ☐ Juke Box ☒ Live ☐ No Music

Number of Musicians & Instruments (Type) 3 piece guitar, drums

Amplified System: ☒ Yes ☐ No

Shows: ☐ Theater ☐ Movies ☐ Floor Show ☐ Light Show ☐ No Show

Other: ☐ Video Games ☐ Pool/Billiard Tables (Please indicate quantity) _____

Applicant's Signature

I certify under the pains and penalties of perjury that the above information is true and that I will comply with all applicable regulations of the Town of Truro.

Kristi A. Wagner 9.6.16

Signature Date

- A valid entertainment license must be on the premises before the entertainment is commenced.
- No entertainment shall be offered, conducted, or otherwise provided by any establishment licensed under MGL Chapter 140 without first obtaining an entertainment license from the Board of Selectmen.
- Sunday entertainment must be specifically requested and addressed in the permitting process.
- These regulations are intended to allow the Board of Selectmen to determine the appropriate parameters to limit impacts to the neighbors of the establishment and to the community by the establishment and the entertainment provided therein.
- A copy of the required Fire Safety Inspection Certificate of the facility must be provided, if applicable.
- The Local Licensing Authority may impose restrictions and/or conditions.

Office Use Only

APPROVAL

License No_____

Board of Selectmen _____ Meeting Date _____

Police Department Kyle Takakjian Date 9/6/16

Restrictions/Conditions attached to the license by the Board of Selectmen or its Delegate: Parking plan - form required for the use of highland rd. (South side curb)

Consent Agenda Item: 6H

DRAFT

Joint Meeting of the
Truro Board of Selectmen and the Truro Planning Board
Selectmen's Chambers Town Hall
Monday, August 8, 2016

Members Present: Chair Paul Wisotzky; Maureen Burgess, Jay Coburn, Robert Weinstein, Janet Worthington
Planning Board Members Present: Chair Lisa Maria Tobia; Bruce Boleyn, Peter Herridge, John Riemer, Steve Sollog
Excused: John Hopkins, Mike Roderick
Also Present: Town Manager Rae Ann Palmer; Town Planner Carole Ridley; Assistant Town Administrator Maureen Thomas; Town Counsel Greg Corbo

Board of Selectmen Paul Wisotzky called the meeting to order at 5:00 p.m. and introduced members of the Board of Selectmen, and Planning Board Chair Lisa Tobia called the Planning Board meeting to order at 5:03 p.m. and introduced members of her Board. Members of both Boards were seated in the audience. The Chairs, the Town Manager and the Town Planner were at the head table.

Paul Wisotzky stated that the purpose of the joint meeting was to obtain ideas concerning protection of the National Seashore District in Truro. He gave background on the efforts of the Board of Selectmen and Planning Board to bring forward past proposals. One of the current goals of the Board of Selectmen is to encourage a bylaw for limitation of building size that could be supported at Annual Town meeting 2017. The forum was structured to ask the audience five main questions. Chair Wisotzky set some basic ground rules for the discussion.

Planning Board Chair Lisa Tobia gave a general background of the Cape Cod National Seashore in the Town of Truro. She noted that the Seashore Guidelines are not the same as Town Bylaws that regulate the approximately 211 privately owned parcels located within the boundaries of the National Seashore. The Planning Board goal is to be respectful of the property in the Seashore District. She reviewed size of lots, setback requirements and site plan review by the Planning Board for these properties. She said that the two-thirds vote that is needed at Town Meeting to adopt zoning bylaws had not been attained in any of the Planning Board's previous attempts to amend zoning bylaws for the National Seashore District. The Planning Board is interested in trying to go forward again if there is consensus among the citizens. Planning Board would like to protect character of the Town without imposing hardships upon owners within the Seashore, Chair Tobia said.

Lauren McKean, Planner for the Cape Cod National Seashore, came forward and gave information on the creation of the National Seashore. One of the requirements for the six towns involved was that each town create zoning bylaws. She explained the 50% formula that was a Park Service guideline that had been established in 1961. Ms. McKean says the Park Service is notified of changes to existing homes located inside the National Seashore. She said that the Cape Cod National Seashore is supportive of development of zoning bylaws and noted that a Park Service review is a part of the process.

The first discussion question for public comment was: *What does the National Seashore Park District mean to Truro?* Tom Bow of 34 Great Hollow Rd. said he considered the Seashore the Town's biggest asset. Reading a prepared statement, Dick Seed of 37 Old Outermost Rd. gave the history of his property which is surrounded by the National Seashore. He does not support further restrictions on property inside the Park. Steve Sollog of the Planning Board gave his opinion that controlling house size is a good idea. Jon Winder of 2 Turnbuckle Way considers the NPS District invaluable and wants to ensure that it be preserved. Priscilla Silva of 53 North Pamet Rd. said 100 acres of her family's property went to the National Seashore. She has seen more and more restrictions be put in place by the Park Service. Brenda Boleyn, former member of the Advisory Board to the National Seashore, said the best thing that had happened to the Cape since its glacial formation was the creation of the Seashore. She encouraged the Town to look to the future, and she read some 1960 quotes from Ozzie Ball in support of the Seashore.

Lisa Tobia asked the next question: *What are our shared concerns about protecting the National Seashore District?* Tom Bow returned to say he did not have concerns but reiterated the importance of preserving its character. Monica Kraft of Dyer's Hollow Rd. had concerns about maintenance of trails, bike paths and roads within the National Seashore. Bill Worthington, former member of the Planning Board, also expressed concerns about maintenance of walking trails and fire roads within the Seashore. The danger of a fire was foremost in his mind. He knows that the lack of maintenance is based on the Seashore's lack of funds for upkeep.

The third question was: *Are you concerned about larger houses being built in place of smaller houses in the National Seashore District?* Carlotta Zilliax, who lives within the National Seashore, said that she believes those who have remained in their homes in that district are committed to the spirit in which the National Seashore was founded. Susan Howe of 12 Houser Way lives near the Seashore. She is concerned about large house size not only in the Seashore District but in the entire town, and she supports legislation for both. Ann Irwin of 97 North Pamet Rd. said her family considered the original guidelines by the National Seashore fair. She said the large houses are not what she wants to see within the Seashore District. Gail Marks of 104 South Pamet Rd. said that they had believed the guidelines were unalterable. She thinks size should be restricted. Rob Lowe of 4 Hughes Rd. did not want to see the character of the town changed with big houses. Priscilla Silva returned to express her opinion that following the 50% guideline would be unfair to some homeowners. John Marksbury of 21 Shore Rd. said he supports, and has been involved in, bringing size bylaws forward as a Town priority. He noted that there were still people who are opposed to the effort. He considered two moral issues: private property rights vs. the common good and secondly fairness. He offered statistics on the number of visitors to the National Seashore.

The fourth question asked: *Are there other concerns about protecting the National Seashore District that you would like to raise?* Chuck Steinman of 21 Shore Rd. talked about the role of the Town in enforcing its regulations, pointing to the campgrounds. Valerie Falk of 41 South Pamet Rd. lives in the Seashore had questions about protecting nature and preventing water pollution. John Winder returned to ask about the old military base's status and plan within in the National Seashore. Chuck Steinman, speaking as Chair of the Historical Commission and member of the Historical Review Board, said those boards support a change for regulations in

the Seashore District. He noted the number of historic buildings that the historical boards would not like to see torn down.

The final question was: *Do any of the concerns you have about protecting the National Seashore District apply town wide?* Jack Peake of 168 Shore Rd. said *yes.* The restrictions of size in the park should apply to the rest of the town, especially since properties outside of the Park are more visible. Rob Lowe returned to commend the boards for moving forward and to discuss the changes that have been detrimental to other towns. Chris Wells of Sylvan Lane said she was worried about liability and the lack of maintenance in the Seashore District. Steve Sollog said he hoped it was evident that many citizens were eager to participate in future proceedings. Stan Sigel of Union Field End said he was concerned about making all of Truro stronger and better. He said that the Town should get the Park Service to do something about their abandoned buildings within the National Seashore. Dave Spanks of 16 Shore Rd. said that he had worked for the Park Service as a naturalist in its early years. He said people are welcome to join the Friends of the National Seashore to help maintain trails. Most of the trails are not official Park trails. He said many changes have already altered the character of the Park. He noted that it is the only Park in the country that has individual property owners within its bounds.

In response to a call for a straw vote of those for or against changes to the bylaw, member of the Board of Selectmen, Jay Coburn of 58 Slough Pond Rd., underscored the importance of citizen support for any zoning bylaw changes. Ann Irwin asked about the mailing list providing notification for this meeting. Walter Morrison of Dyer Rd. asked that any zoning restrictions be simple and objective. Ann Greenbaum of 22 Gospel Path talked about creation of a Chilmark bylaw that adhered to simplicity so that people there understood in advance what the bylaw was meant to do. She also requested that the opportunities for community comment be varied, ongoing and constant. John Marksbury also recommended simplicity like Wellfleet, Eastham and Chilmark bylaws. Buddy Perkel questioned the representation of citizens at the meeting since only the part-time residents were invited. Janet Worthington said there are other voices that the Town still needs to hear. Gary Cooper of 2 Andrew Way asked that we be stewards of the environment and not make decisions blindly without considering environmental impact. Regan McCarthy pointed out size expansions which followed the Seashore Guidelines and other properties that have not been changed since the creation of the Seashore. Tom Shofer, who lives within the Seashore District, discussed property rights and his concerns about commercialization within the National Seashore. Helen McNeil Ashton of 27 Great Hollow Rd. commented on existing houses within the National Seashore, particularly the nature of traditional cottages before its creation, which she would like to see preserved even as a part of a rebuild. Jack Riemer of the Planning Board asked that a straw poll be taken as a member of the audience had requested.

Paul Wisotzky took a straw poll of those in favor and those opposed to a size bylaw within the Seashore and a second straw poll of those in favor and those against a size bylaw for the whole town. Hands indicated majority support for bylaws for both the Seashore District and the rest of the town.

Paul Wisotzky encouraged the audience to complete and submit the survey that had been distributed. He said that there will be a follow-up fall meeting. People can also subscribe to the Planning Board online to follow Planning Board activity, he said.

ADJOURNMENT
The joint meeting was adjourned at 6:37 p.m.

Respectfully submitted,

Mary Rogers, Secretary

_____ _____

Paul Wisotzky, Chair Maureen Burgess

_____ _____

Jay Coburn, Clerk Janet Worthington, Vice-chair

_____

Robert Weinstein

Public Records Material for 8/8/16
Five Questions Survey

Consent Agenda Item: 6H

DRAFT

Truro Board of Selectmen Meeting
Selectmen's Chambers Town Hall
Tuesday, August 9, 2016

Members Present: Chair Paul Wisotzky; Maureen Burgess, Jay Coburn, Robert Weinstein, Janet Worthington
Present: Town Manager Rae Ann Palmer

Paul Wisotzky called the meeting to order at 5:00 p.m.

TABLED ITEMS

Scholarship endowment

Town Manager Rae Ann Palmer and the Board discussed the potential scholarship endowment. the mechanism for implementing the scholarships. The Town Manager said the final agreement had not been sent to the donor. She said there was further administrative costs that the donor had agreed to cover. Town Counsel will need to review the finalized agreement. A foundation will be established to handle the funds.

Jay Coburn moved to agree in concept to administering a scholarship for the benefit of residents of the Town and authorize the Chair, the Town Manager and Town Counsel to finalize the agreement. Robert Weinstein seconded, and the motion carried 5-0.

Curb Cut for 92 Castle Rd.

Jay Coburn recused himself from the room for deliberations.

Rae Ann Palmer explained the revised plan for a Curb Cut Permit at 92 Castle Rd. which showed the angle of the driveway. The curb cut will remain where it was originally planned. For the 3-lot subdivision. Robert Weinstein advocated moving the curb cut because of the bad sight lines from the road. Lot 3 is very steep, but Town staff had reviewed and approved the curb cut plan, according to the Town Manager.

Robert Weinstein moved to approve a Curb Cut Permit for 92 Castle Rd. Janet Worthington seconded, and the motion carried 3-1.

Jay Coburn returned to the table.

American Lung Association Bike Trek

Town Manager Rae Ann Palmer said this was no longer an Action Item. The bike event is an annual event, and the riders come in from Wellfleet on Old County Rd.

BOARD OF SELECTMEN ACTION

Municipal Calendar/Fiscal Year 2018 Budget Preparations

The Selectmen reviewed the Municipal Calendar for 2017 ATM and Fiscal Year 2018 Budget Preparations. Rae Ann Palmer said that the Town Clerk had provided the dates for elections. The Budget Task Force schedule had only tentative dates at this time.

Jay Coburn moved to approve the Municipal Calendar for 2017 ATM and Fiscal Year 2018 Budget Preparations. Robert Weinstein seconded, and the motion carried 5-0.

East Harbor

Bob Hamilton of the Woods Hole Group gave a PowerPoint presentation on plans for East Harbor. He reviewed the history, need for the project, alternative solutions, costs and next steps for the East Harbor culvert restoration. He offered immediate steps, a short term solution and a long term multi-stakeholder solution with decisions left up to the Town. Robert Weinstein said that the project has been brought to the attention to the State Department of Transportation. There is a possibility that federal highway funds may be available for the project. Town Manager Rae Ann Palmer reminded the Board that the money for repairing the culvert had been voted in at Town Meeting. She said the Town should be looking towards further repair. Dana Pazolt came forward with another suggestion for East Harbor. Paul Wisotzky asked about gaining Town ownership of the easement property, which is for sale, and Rae Ann Palmer said she would look at this possibility.

Aquaculture Grant License–Pazolt 654 Shore Rd

Tony Jackett, Harbor Master/Shellfish Constable and Dana Pazolt presented information for renewal of a five-year aquaculture grant license for Dana Pazolt at 654 Shore Rd. Mr. Pazolt has been working diligently on his successful grant. Tony Jackett said he had been impressed with Mr. Pazolt's shellfish operations. Robert Weinstein added his commendation of Dana Pazolt's commitment to his aquaculture business. Jay Coburn said that the Community Development Partnership has a micro-loan service available for shellfishermen.

Robert Weinstein moved to issue a five-year Aquaculture Grant License for Dana Pazolt. Janet Worthington seconded, and the motion carried 5-0.

Mr. Pazolt requested that his business partner's be added to the license motion.

Jay Coburn moved to amend the motion to add John Burns to the license. Maureen Burgess seconded, and the motion carried 5-0.

The amended motion to issue a five-year Aquaculture Grant License for Dana Pazolt and John Burns carried 5-0.

Mr. Pazolt urged the Selectmen to have the Town of Truro become, through a home rule petition, the governing body in charge of aquaculture.

Board of Selectmen Sponsored End of Season Dance at Corn Hill Beach

Janet Worthington announced plans for a Selectmen-sponsored End of Season Dance at Corn Hill Beach. Rae Ann Palmer said that the staff had more suggestions for including children's activities, hiring two bands, inviting a radio broadcasting truck, renting a canopy for the stage, including a bonfire, and providing police and fire coverage. The Selectmen agreed upon an event to take place from 3 to 7 p.m. on Saturday, September 24, 2016 with a rain date of Sunday, September 25th. Corn Hill and Rose Cottage abutters will be notified of the event.

CONSENT AGENDA

There were three items on the Consent Agenda:

A. Review/Approve and Authorize Signature:

1. Letter in Support of Innovative/Alternative Septic System Technology Pilot Funding in the Economic Development Bill,

B. Approval of Common Victualer License for Babe's Bakery Inc., 69 Shore Road; and

C. Review and Approve Regular Board of Selectmen Minutes of July 26, 2016.

Robert Weinstein questioned the status of Babe's business and requested that item B be removed until a clarification is provided. Rae Ann Palmer said that they have an approved health license and their opening is being monitored by the Health Agent. She added that Town Counsel had affirmed their status to open, and she recommended the license approval.

Jay Coburn moved to approve the Consent Agenda as presented. Maureen Burgess seconded, and the motion carried 5-0.

SELECTMEN AND LIAISON AND TOWN MANAGER REPORTS

Everyone reported on the public forum on protecting the National Seashore District, presented as a joint meeting with the Planning Board. Jay Coburn noted the meeting with the Planning Board but left the commentary to the rest of the Board. Janet Worthington commented favorably on the joint meeting; she thought it was a good start and hopes that the Boards will continue to keep communications going with the public. Paul Wisotzky said he was happy with the turn out. Continuation has now moved over to the Planning Board, he said. Maureen Burgess said she enjoyed the meeting and all the commentary from those who attended. She gave a public service warning of a new tick-borne disease called Powassan, which can be transmitted in minutes. During his Selectmen's Hours, Robert Weinstein heard from someone planning an accessory dwelling unit. He said that he hopes the process would be clear so as to encourage others. He reported on the bike lane work for Truro, which should be done in spring of 2017. He too commented favorably on the joint meeting with the Planning Board until it came to the straw poll. He said he was outraged that the straw poll was taken because it is still a vote and should not be taken at the start of an open discussion process. He also disapproved of a hand-out that included photos of private homes, none of which were located in the National Seashore in Truro. Jay Coburn pointed out that the hand-out was not distributed by the Town Boards. Town Manager Rae Ann Palmer commented on the postcard notification to property owners in the National Seashore. She also noted the limitations of size in the Selectmen's Hearing Room in the event of another large audience and has plans for providing additional seating.

Moving onto other matters, the Town Manager said that the Assistance to Firefighters Grant had been awarded for 90% of the cost of the new breathing apparatus that had recently been purchased. The Town had also received a Community Compact Grant to hire someone to study potential for regionalization with Provincetown. Many applications have already been received for the Fire Department, she said. The Assistant Town Administrator and Fire Chief will work on screening the applicants. Ms. Palmer will look into a policy for local residents' preference.

NEXT MEETING AGENDA
Jay Coburn moved to cancel the meeting scheduled for August 23, 2016. Robert Weinstein seconded, and the motion carried 5-0.

Town Manager Rae and Palmer and the Board reviewed anticipated agenda items for the next meeting to be held Tuesday, September 13. Items so far included: The tax classification hearing, the American Lung Association bike event, Conservation Restrictions, a presentation on the Herring River Restoration Project, a report on the Transfer Station trenching, and a Declaration of Suicide Prevention Week. Janet Worthington requested updates on Fire and Police communications with the Town Manager.

ADJOURNMENT
Maureen Burgess moved to adjourn. Robert Weinstein seconded, and the motion carried 5-0. The meeting was adjourned at 6:30 p.m.

Respectfully submitted,

Mary Rogers, Secretary

_____ _____

Paul Wisotzky, Chair Maureen Burgess

_____ _____

Jay Coburn, Clerk Janet Worthington, Vice-chair

_____

Robert Weinstein

Public Records Material for 8/9/16

1. Curb cut plan for 92 Castle Rd.
2. Woods Hole Group report on East Harbor Culvert
3. Letter in Support of Innovative/Alternative Septic System Technology Pilot Funding in the Economic Development Bill,
4. Approval of Common Victualer License for Babe's Bakery Inc., 69 Shore Road